Introduction

This Technical Booklet has been prepared by the Department of the Environment for Northern Ireland and provides for certain methods and standards of building which, if followed, will satisfy the requirements of the Building Regulations (Northern Ireland) 1994 ("the Building Regulations").

There is no obligation to follow the methods or comply with the standards set out in this Technical Booklet.

If you prefer you may adopt another way of meeting the requirements of the Building Regulations but you will have to demonstrate that you have satisfied those requirements by other means.

Other regulations

This Technical Booklet relates only to the requirements of regulations D2 and D5. The work will also have to comply with all other relevant Building Regulations.

British Standards and European Technical Specifications

In this introduction and throughout this Technical Booklet any reference to a British Standard shall be construed as a reference to –

(a) a British Standard or British Standard Code of Practice

(b) a harmonised standard or other relevant standard of a national standards body of any Member State of the European Economic Area;

(c) an international standard recognised for use in any Member State of the European Economic Area;

(d) any appropriate, traditional procedure of manufacture of a Member State of the European Economic Area which has a technical description sufficiently detailed to permit an assessment of the goods or materials for the use specified; or

(e) a European Technical Approval issued in accordance with the Construction Products Directive,

provided that the proposed standard, code of practice, specification, technical description or European Technical Approval provides, in use, equivalent levels of safety, suitability and fitness for purpose as that provided by the British Standard.

Products conforming with a European Council Directive

Any product designed and manufactured to comply with the requirements of a European Council Directive does not have to comply with any other standard or part of a standard, whether British, International or other, which relates to the same characteristic or specific purpose as the EC Directive.

EC marked construction products

Any construction product (within the meaning of the Construction Products Directive) which bears a EC Mark shall be treated as if it satisfied the requirements of any appropriate British Board of Agrément Certificate, British Standard or British Standard Code of Practice relating to such a product, where the EC Mark relates to the same characteristic or specific purpose as the Certificate, Standard or Code of Practice.

Testing of materials and construction

Where for the purposes of this Technical Booklet testing is carried out it shall be carried out by an appropriate organisation offering suitable and satisfactory evidence of technical and professional competence and independence. This condition shall be satisfied where the testing organisation is accredited in a Member State of the European Economic Area in accordance with the relevant parts of the EN 45000 series of standards for the tests carried out.

Materials and workmanship

Any work to which a requirement of the Building Regulations applies must, in accordance with Part B of the Building Regulations, be carried out with suitable materials and in a workmanlike manner. You can comply with the requirements of Part B by following the appropriate British Standard or you may demonstrate that you have complied with those requirements by other suitable means, such as an acceptable British Board of Agrément Certificate, Quality Assurance Scheme, Independent Certification Scheme or Accredited Laboratory Test Certificate.

Diagrams

The Diagrams in this Technical Booklet supplement the text. They do not show all the details of construction and are not intended to illustrate compliance with any other requirement of the Building Regulations. They are not necessarily to scale and should not be used as working details.

Reference

Any reference in this Technical Booklet to a publication shall, unless otherwise stated, be construed as a reference to the edition quoted, together with any amendments, supplements or addenda thereto current at 28 February 1994.

Contents

		Page
Section 1	General, Definitions and Basic requirements for stability	**3**
Section 2	Sizes of certain timber floor, ceiling and roof members in single family houses	**4**
Section 3	Thickness of walls in certain small buildings	**32**
Section 4	Proportions for masonry chimneys above the roof surface	**51**
Section 5	Strip foundations of plain concrete	**52**
Section 6	Disproportionate collapse	**54**
Appendix	Publications referred to	**55**

Section 1 – General, Definitions and Basic requirements for stability

1.1 The general rules in 1.3 must be complied with when using Sections 2 and 3. Sections 2 to 6 may be used independently of each other.

Definitions

1.2 In this Technical Booklet the following definitions apply –

Buttressing wall – a wall designed and constructed to afford lateral support to another wall perpendicular to it, support being provided from the base to the top of the wall.

Cavity width – the horizontal distance between the two leaves of a cavity wall.

Compartment wall - a wall constructed as a compartment wall to meet the requirements of regulation E6(3).

Dead load – the load due to the weight of all walls, permanent partitions, floors, roofs and finishes, including services, and all other permanent construction.

Imposed load – the load assumed to be produced by the intended occupancy or use, including the weight of movable partitions, distributed, concentrated, impact, inertia and snow loads, but excluding wind loads.

Pier – a member which forms an integral part of a wall, in the form of a thickened section at intervals along the wall so as to afford lateral support to the wall to which it is bonded or securely tied.

Separating wall – a wall or part of a wall which is common to adjoining buildings, and constructed to meet the requirements of regulation E6(2).

Spacing – the distance between the longitudinal centres of any 2 adjacent timber members of the same type, measured in the plan of floor, ceiling or roof structure of which the members form a part.

Span – the distance measured along the centre line of a member between the centres of any two adjacent bearings or supports.

Note: the spans given in Section 2 for floor joists, rafters, purlins, ceiling joists, binders and roof joists are clear spans, i.e. spans between the faces of the supports.

Supported wall – a wall to which lateral support is afforded by a combination of buttressing walls, piers or chimneys acting in conjunction with floor(s) or roof.

Wind load - the load due to the effect of wind pressure or suction.

Basic requirements for stability

1.3 These basic requirements for stability must be used in conjunction with Sections 2 and 3.

Roofs – trussed rafter roofs shall be braced to the recommendations of BS 5268: Part 3: 1985.

Where a traditionally framed roof (i.e. using rafters, purlins and ceiling joists) does not have sufficient built-in resistance to instability, for instance from hipped returns, rigid sarking or the like, then bracing equivalent to that recommended in BS 5268: Part 3: 1985 shall be provided.

Walls – if the roof structure is braced as described above and adequately anchored to the structure beneath, and the walls are designed and restrained in accordance with the requirements of Section 3, no further provision is required to take account of loads due to the effect of wind pressure or suction.

Section 2 – Sizes of certain timber floor, ceiling and roof members in single family houses

Application

2.1 This section applies only to single family houses of not more than 3 storeys.

The use of this Section

2.2 The stability requirements in 1.3 shall be complied with when using this Section.

2.3 The dimensions of a timber member may be determined by this Section if –

(a) the dead and imposed loads to be sustained by the floor, ceiling or roof of which the member forms part do not exceed the values given in the notes to the appropriate diagrams and tables;

(b) the species and grade of timber for the strength class to which the table relates is either –

(i) as given in Table 2.1 for more common species; or
(ii) as given in the more comprehensive tables of BS 5268: Part 2: 1991; and

(c) floorboarding complying with BS 1297: 1987 is used.

2.4 The strength classes, species, grades and species combinations referred to in this Section are as defined in BS 5268: Part 2: 1991.

2.5 The cross sectional dimensions given in the tables to this Section are applicable to either basic sawn or regularised sizes as defined in BS 4471: 1987. Reference should be made to the accompanying notes to the tables to determine whether sawn or regularised sizes apply. The tables do not apply where dimensions have been reduced by planing. For timber of North American origin the tables apply only as indicated to surface sizes unless the timber has been resawn to BS 4471 requirements.

2.6 Notches and holes in simply supported floor and roof joists shall be within the following limits –

(a) notches shall be no deeper than 0.125 times the depth of a joist; and shall not be cut closer to the support than 0.07 of the span, nor further away than 0.25 times the span; and

(b) holes shall be no greater diameter than 0.25 times the depth of the joist; shall be drilled at the neutral axis; shall be not less than 3 diameters (centre to centre) apart; and shall be located between 0.25 and 0.4 times the span from the supports.

No notches or holes shall be cut in roof rafters, other than at supports where the rafter may be birdsmouthed to a depth not exceeding 0.33 times the rafter depth.

2.7 Bearing areas and workmanship shall comply with the relevant requirements of BS 5268: Part 2: 1991. Refer also to paragraphs 3.33 to 3.37.

Spans, sizes and spacings for timber members

2.8 Table 2.2 and Diagram 2.1 refer to further tables and diagrams with accompanying notes that give spans, sizes and spacings for certain timber floor, ceiling and roof members.

In Table 2.4 to 2.27 all spans, except those for floorboards, are measured as the clear dimension between supports, and all spacings are the dimensions between longitudinal centres of members.

2.9 Tables 2.8 to 2.23 give the sizes of certain roof members for imposed loads of 0.75 kN/m^2 and 1.00 kN/m^2. The loading applicable at a particular site depends on the elevation of that site above sea level, as follows -

(**a**) 0 m to 180 m above sea level – 0.75 kN/m^2; and

(**b**) 180 m to 300 m above sea level - 1.00 kN/m^2.

Sites at higher elevations are beyond the scope of this Technical Booklet.

Table 2.1 Common species/grade combinations which satisfy the requirements for the strength classes to which Tables 2.4-2.27 relate.

Species	Origin	Grading Rules	Grades to satisfy strength class				
			SC3			SC4	
Redwood or Whitewood	imported	BS 4978	GS	MGS	M50	SS	MSS
Douglas Fir	UK	BS 4978	M50	SS	MSS		
Larch	UK	BS 4978	GS	MGS	M50	SS	MSS
Scotch Pine	UK	BS 4978	GS	MGS	M50	SS	MSS
Corsican Pine	UK	BS 4978		M50		SS	MSS
European Spruce	UK	BS 4978		M75			
Sitka Spruce	UK	BS 4978		M75			
Douglas FIr-Larch Hem-Fir Spruce-Pine-Fir	CANADA	BS 4978	GS	MGS	M50	SS	MSS
Douglas Fir-Larch Hem-Fir Spruce-Pine-Fir	CANADA	NLGA	Joist and Plank No. 1 and No. 2 Struct. L.F. No. 1 & No. 2			Joist & Plank Select Struct. L.F. Select	
Douglas Fir-Larch Hem-Fir Spruce-Pine-Fir	CANADA	MSR	Machine Stress-Rated 1450f-1.3E			Machine Stress-Rated 1650f-1.5E	
Douglas Fir-Larch	USA	BS4978	GS	MGS		SS	MSS
Hem-Fir	USA	BS 4978	GS	MGS	M50	SS	MSS
Western Whitewoods	USA	BS 4978	SS	MSS			
Southern Pine	USA	BS 4978	GS	MGS		SS	MSS
Douglas Fir-Larch	USA	NGRDL	Joist and Plank No. 1 & No. 2 Struct L.F. No.1 & No.2			Joist & Plank Select Struct. L.F. Select	
Hem-Fir	USA	NGRDL	Joist and Plank No.1 & No.2 Struct. L.F. No.1 & No.2			Joist & Plank Select Struct. L.F. Select	
Western Whitewoods	USA	NGRDL	Joist & Plank Select Struct. L.F. Select				
Southern Pine	USA	NGRDL	Joist & Plank No.3 Stud grade			Joist & Plank Select	
Douglas Fir-Larch Hem-Fir Southern Pine	USA	MSR	Machine Stress-Rated 1450f-1.3E			Machine Stress-Rated 1650f-1.5E	

Notes:

1. The common species/grade combinations given in this table are for particular use with the other tables in this section and for the cross section sizes given in those tables. Definitive and more comprehensive tables for assigning species/grade combinations to strength classes are given in BS 5268: Part 2: 1991.
2. The grading rules for American and Canadian Lumber are those approved by the American Lumber Standards Board of Review and the Canadian Lumber Standards Accreditation Board respectively (see BS 5268: Part 2: 1991).

Diagram **2.1** **Key to tables relating to timber members**

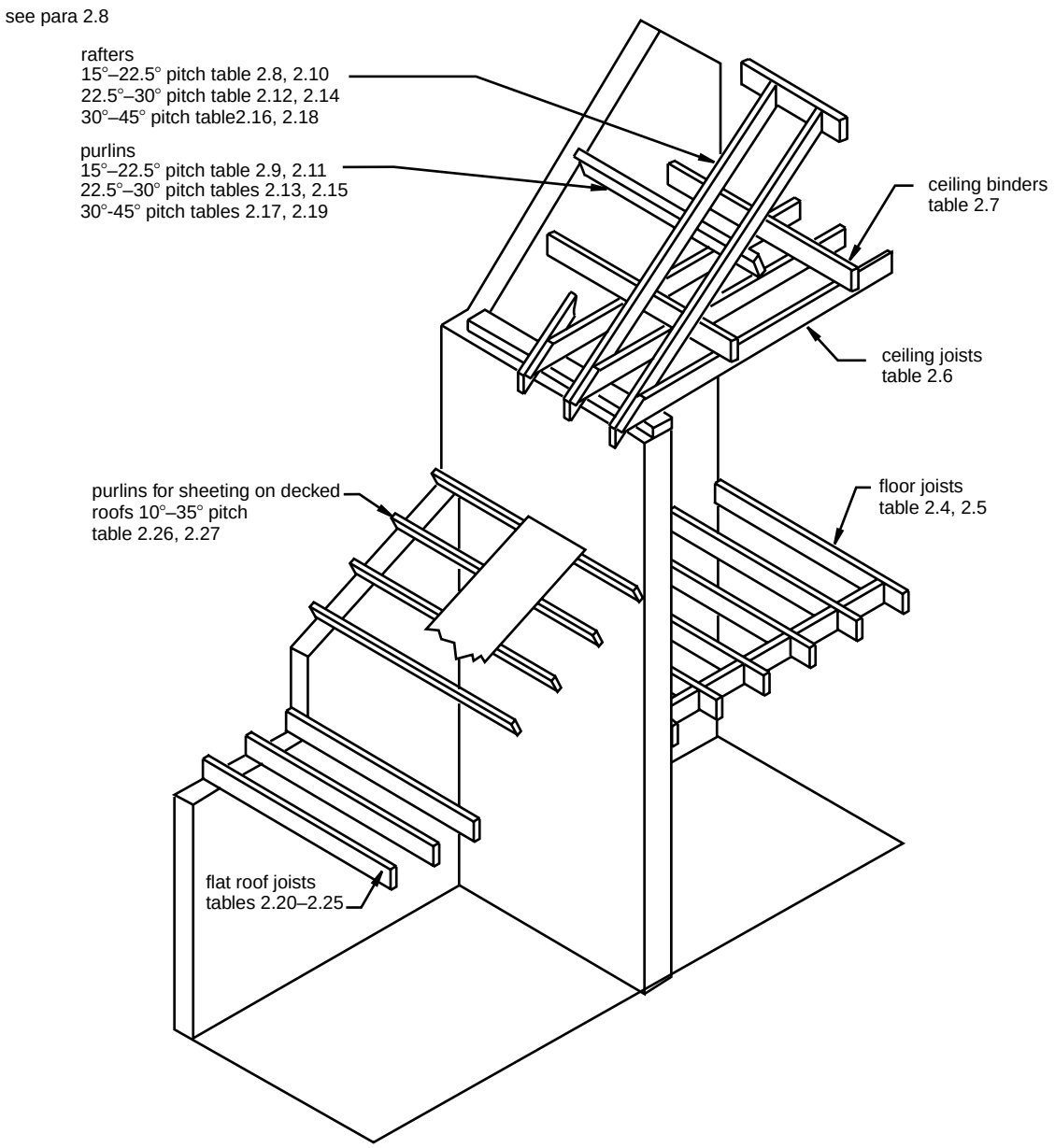

Table 2.2 Schedule of tables relating to timber members

Construction	Timber members	Imposed Loading KN/m^2	Table numbers Strength class SC3	SC4
Floors	joists		2.4	2.5
Ceilings	joists		2.6	2.6
	binders		2.7	2.7
Pitched roofs greater than 15° but less than or equal to 22½°	rafters	0.75	2.8	2.8
		1.00	2.10	2.10
	purlins	0.75	2.9	2.9
		1.00	2.11	2.11
Pitched roofs greater than 22½° but less than or equal to 30°	rafters	0.75	2.12	2.12
		1.00	2.14	2.14
	purlins	0.75	2.13	2.13
		1.00	2.15	2.15
Pitched roofs greater than 30° but less than or equal to 45°	rafters	0.75	2.16	2.16
		1.00	2.18	2.18
	purlins	0.75	2.17	2.17
		1.00	2.19	2.19
Flats roofs access for maintenance only	joists	0.75	2.20	2.21
		1.00	2.22	2.23
Flat roofs full access allowed	joists		2.24	2.25
Sheeted or decked roofs greater than 10° but less than or equal to 35°	purlins	0.75	2.26	2.26
		1.00	2.27	2.27

Notes

1. The strength class given in this table assumes that the species and grades of timber to be used are those described in Table 2.1.
2. The diagrams are only illustrative and do not show all details of construction. Adequate connections between members shall be provided as appropriate.
3. These tables to not apply to trussed rafter roofs.

2.10 Floor joists spanning in excess of 2.5 m shall be strutted by one or more rows of solid or herringbone strutting in accordance with Table 2.3. Solid strutting shall be at least 38 mm timber thickness extending at least 0.75 times the depth of the joists. Herringbone strutting shall be of at least 38 mm x 38 mm timber size but shall not be used where the distance between joists is greater than 3 times in depth of the joists.

Table 2.3 Strutting to joists

Joist span m	No. of rows of strutting
less than 2.5	none
2.5-4.5	1 at mid-span
more than 4.5	2 at one third span positions

Table **2.4** **Floor joists**

Maximum clear span of joist (m) Timber of strength class SC3 (see Table 2.1)

	Dead Load [kN/m^2] excluding the self weight of the joist								
	Not more than 0.25			More than 0.25 but not more than 0.50			More than 0.50 but not more than 1.25		
	Spacing of joists (mm)								
Size of joist (mm x mm)	400	450	600	400	450	600	400	450	600
38 x 97	1.83	1.69	1.30	1.72	1.56	1.21	1.42	1.30	1.04
38 x 122	2.48	2.39	1.93	2.37	2.22	1.76	1.95	1.79	1.45
38 x 147	2.98	2.87	2.51	2.85	2.71	2.33	2.45	2.29	1.87
38 x 170	3.44	3.31	2.87	3.28	3.10	2.69	2.81	2.65	2.27
38 x 195	3.94	3.75	3.26	3.72	3.52	3.06	3.19	3.01	2.61
38 x 220	4.43	4.19	3.65	4.16	3.93	3.42	3.57	3.37	2.92
47 x 97	2.02	1.91	1.58	1.92	1.82	1.46	1.67	1.53	1.23
47 x 122	2.66	2.56	2.30	2.55	2.45	2.09	2.26	2.08	1.70
47 x 147	3.20	3.08	2.79	3.06	2.95	2.61	2.72	2.57	2.17
47 x 170	3.69	3.55	3.19	3.53	3.40	2.99	3.12	2.94	2.55
47 x 195	4.22	4.06	3.62	4.04	3.89	3.39	3.54	3.34	2.90
47 x 220	4.72	4.57	4.04	4.55	4.35	3.79	3.95	3.74	3.24
50 x 97	2.08	1.97	1.67	1.98	1.87	1.54	1.74	1.60	1.29
50 x 122	2.72	2.62	2.37	2.60	2.50	2.19	2.33	2.17	1.77
50 x 147	3.27	3.14	2.86	3.13	3.01	2.69	2.81	2.65	2.27
50 x 170	3.77	3.62	3.29	3.61	3.47	3.08	3.21	3.03	2.63
50 x 195	4.31	4.15	3.73	4.13	3.97	3.50	3.65	3.44	2.99
50 x 220	4.79	4.66	4.17	4.64	4.47	3.91	4.07	3.85	3.35
63 x 97	2.32	2.20	1.92	2.19	2.08	1.82	1.93	1.84	1.53
63 x 122	2.93	2.82	2.57	2.81	2.70	2.45	2.53	2.43	2.09
63 x 147	3.52	3.39	3.08	3.37	3.24	2.95	3.04	2.92	2.58
63 x 170	4.06	3.91	3.56	3.89	3.74	3.40	3.50	3.37	2.95
63 x 195	4.63	4.47	4.07	4.44	4.28	3.90	4.01	3.85	3.35
63 x 220	5.06	4.92	4.58	4.91	4.77	4.37	4.51	4.30	3.75
75 x 122	3.10	2.99	2.72	2.97	2.86	2.60	2.68	2.58	2.33
75 x 147	3.72	3.58	3.27	3.56	3.43	3.13	3.22	3.09	2.81
75 x 170	4.28	4.13	3.77	4.11	3.96	3.61	3.71	3.57	3.21
75 x 195	4.83	4.70	4.31	4.68	4.52	4.13	4.24	4.08	3.65
75 x 220	5.27	5.13	4.79	5.11	4.97	4.64	4.74	4.60	4.07
38 x 140	2.84	2.73	2.40	2.72	2.59	2.17	2.33	2.15	1.75
38 x 184	3.72	3.56	3.09	3.53	3.33	2.90	3.02	2.85	2.47
38 x 235	4.71	4.46	3.89	4.43	4.18	3.64	3.80	3.59	3.11

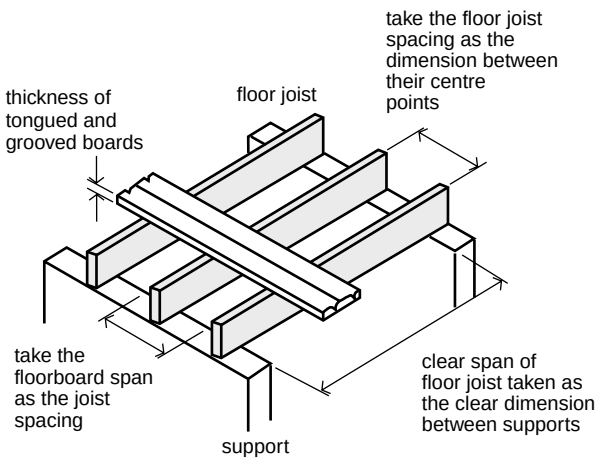

Notes to Tables 2.4 and 2.5

1. Softwood tongued and grooved floorboards if supported at a joist spacing of up to 500mm shall be at least 16mm finished thickness; and if supported at wider spacings up to 600mm shall be 19mm finished thickness.

2. The sizes, spacings and spans given will support the dead loads stated in the tables, and an imposed load not exceeding 1.5k/Nm^2. (These tables can be used when a bath is to be installed provided joists supporting the bath are duplicated).

Table **2.5** **Floor joists**

Maximum clear span of joist (m) Timber of strength class SC4 (see Table 2.1)

	Dead Load [kN/m^2] excluding the self weight of the joist								
	Not more than 0.25			More than 0.25 but not more than 0.50			More than 0.50 but not more than 1.25		
	Spacing of joists (mm)								
Size of joist (mm x mm)	400	450	600	400	450	600	400	450	600
38 x 97	1.94	1.83	1.59	1.84	1.74	1.51	1.64	1.55	1.36
38 x 122	2.58	2.48	2.20	2.47	2.37	2.08	2.18	2.07	1.83
38 x 147	3.10	2.98	2.71	2.97	2.85	2.59	2.67	2.56	2.31
38 x 170	3.58	3.44	3.13	3.43	3.29	2.99	3.08	2.96	2.68
38 x 195	4.10	3.94	3.58	3.92	3.77	3.42	3.53	3.39	3.07
38 x 220	4.61	4.44	4.03	4.41	4.25	3.86	3.97	3.82	3.46
47 x 97	2.14	2.03	1.76	2.03	1.92	1.68	1.80	1.71	1.50
47 x 122	2.77	2.66	2.42	2.65	2.55	2.29	2.38	2.27	2.01
47 x 147	3.33	3.20	2.91	3.19	3.06	2.78	2.87	2.75	2.50
47 x 170	3.84	3.69	3.36	3.67	3.54	3.21	3.31	3.18	2.88
47 x 195	4.39	4.22	3.85	4.20	4.05	3.68	3.79	3.64	3.30
47 x 220	4.86	4.73	4.33	4.71	4.55	4.14	4.26	4.10	3.72
50 x 97	2.20	2.09	1.82	2.08	1.98	1.73	1.84	1.75	1.54
50 x 122	2.83	2.72	2.47	2.71	2.60	2.36	2.43	2.33	2.06
50 x 147	3.39	3.27	2.97	3.25	3.13	2.84	2.93	2.81	2.55
50 x 170	3.91	3.77	3.43	3.75	3.61	3.28	3.38	3.25	2.94
50 x 195	4.47	4.31	3.92	4.29	4.13	3.75	3.86	3.72	3.37
50 x 220	4.93	4.80	4.42	4.78	4.64	4.23	4.35	4.18	3.80
63 x 97	2.43	2.32	2.03	2.31	2.19	1.93	2.03	1.93	1.71
63 x 122	3.05	2.93	2.67	2.92	2.81	2.55	2.63	2.53	2.27
63 x 147	3.67	3.52	3.21	3.50	3.37	3.07	3.16	3.04	2.76
63 x 170	4.21	4.06	3.70	4.04	3.89	3.54	3.64	3.51	3.19
63 x 195	4.77	4.64	4.23	4.61	4.45	4.05	4.17	4.01	3.65
63 x 220	5.20	5.06	4.73	5.05	4.91	4.56	4.68	4.51	4.11
75 x 122	3.22	3.10	2.83	3.09	2.97	2.71	2.78	2.68	2.43
75 x 147	3.86	3.72	3.39	3.70	3.57	3.25	3.34	3.22	2.93
75 x 170	4.45	4.29	3.91	4.27	4.11	3.75	3.86	3.71	3.38
75 x 195	4.97	4.83	4.47	4.82	4.69	4.29	4.41	4.25	3.86
75 x 220	5.42	5.27	4.93	5.25	5.11	4.78	4.88	4.74	4.35
38 x 140	2.96	2.84	2.58	2.58	2.72	2.47	2.54	2.44	2.17
38 x 184	3.87	3.72	3.38	3.70	3.56	3.23	3.33	3.20	2.90
38 x 235	4.85	4.71	4.31	4.70	4.54	4.12	4.24	4.08	3.70

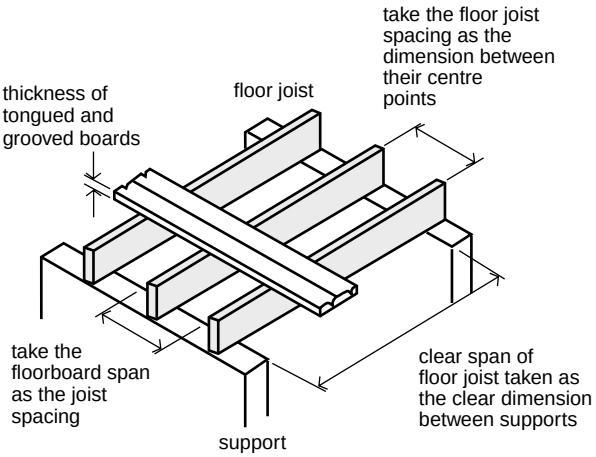

3. The section sizes are either regularised from BS4471 basic sawn sizes in accordance with the requirements and tolerances of BS4471 or CLS/ALS sizes with BS4471 tolerances.

4. The minimum bearing length at supports for floor joists shall be 35 mm.

5. Notches and drilling of floor joists shall not exceed the limits given in paragraph 2.6.

6. Partition loads have not been allowed for in tables 2.4 and 2.5.

Table **2.6** **Ceiling joists**

Maximum clear span of joist (m) Timber of strength class SC3 and SC4 (see Table 2.1)

	Dead Load [kN/m²] excluding the self weight of the joist											
	Not more than 0.25			More than 0.25 but not more than 0.50			Not more than 0.25			More than 0.25 but not more than 0.50		
	Spacing of joists (mm)											
Size of joist (mm x mm)	400	450	600	400	450	600	400	450	600	400	450	600
38 x 72	1.15	1.14	1.11	1.11	1.10	1.06	1.21	1.20	1.17	1.17	1.16	1.12
38 x 97	1.74	1.72	1.67	1.67	1.64	1.58	1.84	1.82	1.76	1.76	1.73	1.66
38 x 122	2.37	2.34	2.25	2.25	2.21	2.11	2.50	2.46	2.37	2.37	2.33	2.22
38 x 147	3.02	2.97	2.85	2.85	2.80	2.66	3.18	3.13	3.00	3.00	2.94	2.79
38 x 170	3.63	3.57	3.41	3.41	3.34	3.16	3.81	3.75	3.58	3.58	3.51	3.32
38 x 195	4.30	4.23	4.02	4.02	3.94	3.72	4.51	4.43	4.22	4.22	4.13	3.89
38 x 220	4.98	4.88	4.64	4.64	4.54	4.27	5.21	5.11	4.86	4.86	4.75	4.47
47 x 72	1.27	1.26	1.23	1.23	1.21	1.17	1.35	1.33	1.30	1.30	1.28	1.24
47 x 97	1.92	1.90	1.84	1.84	1.81	1.73	2.03	2.00	1.93	1.93	1.90	1.83
47 x 122	2.60	2.57	2.47	2.47	2.42	2.31	2.74	2.70	2.60	2.60	2.55	2.43
47 x 147	3.30	3.25	3.11	3.11	3.05	2.90	3.47	3.42	3.27	3.27	3.21	3.04
47 x 170	3.96	3.89	3.72	3.72	3.64	3.44	4.15	4.08	3.89	3.89	3.81	3.61
47 x 195	4.68	4.59	4.37	4.37	4.28	4.04	4.90	4.81	4.57	4.57	4.47	4.22
47 x 220	5.39	5.29	5.03	5.03	4.91	4.63	5.64	5.53	5.25	5.25	5.14	4.84
50 x 72	1.31	1.30	1.27	1.27	1.25	1.21	1.39	1.37	1.34	1.34	1.32	1.28
50 x 97	1.97	1.95	1.89	1.89	1.86	1.78	2.08	2.06	1.99	1.99	1.96	1.88
50 x 122	2.67	2.63	2.53	2.53	2.49	2.37	2.81	2.77	2.66	2.66	2.62	2.49
50 x 147	3.39	3.34	3.19	3.19	3.13	2.97	3.56	3.50	3.35	3.35	3.29	3.12
50 x 170	4.06	3.99	3.81	3.81	3.73	3.53	4.25	4.18	3.99	3.99	3.91	3.69
50 x 195	4.79	4.70	4.48	4.48	4.38	4.13	5.01	4.92	4.68	4.68	4.58	4.32
50 x 220	5.52	5.41	5.14	5.14	5.03	4.73	5.77	5.66	5.37	5.37	5.25	4.95
38 x 89	1.54	1.53	1.48	1.48	1.46	1.41	1.63	1.62	1.57	1.57	1.55	1.49
38 x 140	2.84	2.79	2.68	2.68	2.63	2.50	2.99	2.94	2.82	2.82	2.77	2.63
38 x 184	4.01	3.94	3.75	3.75	3.68	3.47	4.20	4.13	3.94	3.94	3.85	3.64

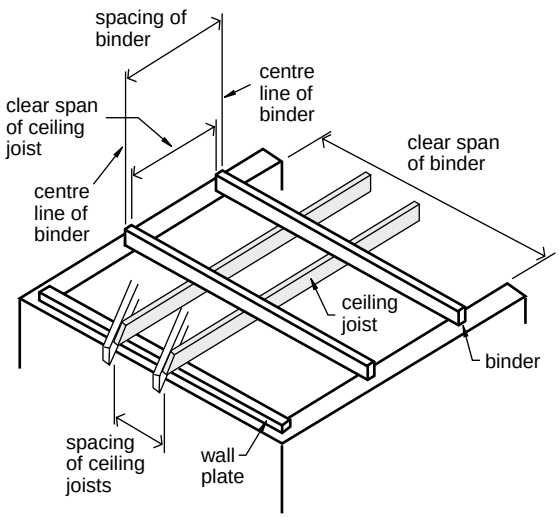

Notes to Tables 2.6 and 2.7

1. Where spans for ceiling joists or binders are unequal the section sizes shall be determined by the longer span.

2. See paragraph 1.3 which gives guidance on the need for bracing roof structures.

3. The sizes, spacings and spans given will support the dead loads given in the table and a maximum imposed load of 0.25kN/m^2 and a concentrated load of 0.9 kN acting together.

   In calculating the ceiling joist sizes no account has been taken of trimming (e.g. around the flues) or other loads (e.g. water tanks).

4. The section sizes for ceiling joists are either regularised from BS4471 basic sawn sizes with the tolerances of BS4471 or CLS/ALS sizes with BS4471 tolerances.

Table **2.7** **Binders supporting ceiling joists**

Maximum clear span of binder (m) Timber of strength class SC3 and SC4 (see Table 2.1)

	Dead Load [kN/m²] excluding the self weight of the binder											
	Not more than 0.25						More than 0.25 but not more than 0.50					
	Spacing of binders (mm)											
Size of joist (mm x mm)	1200	1500	1800	2100	2400	2700	1200	1500	1800	2100	2400	2700
SC3												
47 x 150	2.17	2.05	1.96	1.88	1.81		1.99	1.87				
47 x 175	2.59	2.45	2.33	2.24	2.15	2.08	2.37	2.23	2.11	2.02	1.94	1.87
50 x 150	2.22	2.11	2.01	1.93	1.86		2.04	1.92	1.83			
50 x 175	2.65	2.51	2.39	2.29	2.21	2.13	2.42	2.28	2.16	2.07	1.99	1.91
50 x 200	3.08	2.91	2.77	2.65	2.55	2.47	2.81	2.64	2.50	2.39	2.29	2.21
63 x 125	1.97	1.87					1.82					
63 x 150	2.44	2.31	2.20	2.12	2.04	1.97	2.23	2.11	2.00	1.91	1.84	
63 x 175	2.90	2.74	2.61	2.51	2.41	2.33	2.65	2.49	2.37	2.26	2.17	2.10
63 x 200	3.37	3.18	3.03	2.90	2.79	2.69	3.07	2.88	2.74	2.61	2.51	2.42
63 x 225	3.83	3.61	3.44	3.29	3.16	3.05	3.49	3.27	3.10	2.96	2.84	2.74
75 x 125	2.12	2.01	1.92	1.85			1.95	1.84				
75 x 150	2.61	2.47	2.36	2.26	2.18	2.11	2.39	2.25	2.14	2.05	1.97	1.90
75 x 175	3.10	2.93	2.79	2.68	2.58	2.49	2.83	2.66	2.53	2.42	2.32	2.24
75 x 200	3.59	3.39	3.23	3.09	2.98	2.88	3.27	3.08	2.92	2.79	2.68	2.58
75 x 225	4.08	3.85	3.66	3.51	3.37	3.26	3.71	3.50	3.31	3.16	3.03	2.92
SC4												
47 x 150	2.28	2.16	2.06	1.98	1.90	1.84	2.09	1.97	1.87			
47 x 175	2.72	2.57	2.45	2.34	2.26	2.18	2.48	2.34	2.22	2.12	2.03	1.96
50 x 150	2.33	2.21	2.11	2.02	1.95	1.89	2.14	2.02	1.92	1.83		
50 x 175	2.78	2.63	2.51	2.40	2.31	2.23	2.54	2.39	2.27	2.17	2.08	2.01
50 x 200	3.23	3.05	2.90	2.78	2.67	2.58	2.95	2.77	2.62	2.51	2.40	2.32
63 x 125	2.07	1.97	1.88	1.81			1.91	1.80				
63 x 150	2.56	2.42	2.31	2.22	2.14	2.07	2.34	2.21	2.10	2.01	1.93	1.86
63 x 175	3.04	2.87	2.74	2.62	2.53	2.44	2.78	2.61	2.48	2.37	2.28	2.20
63 x 200	3.52	3.32	3.16	3.03	2.92	2.82	3.21	3.02	2.86	2.73	2.63	2.53
63 x 225	4.00	3.77	3.59	3.44	3.31	3.19	3.65	3.42	3.24	3.10	2.97	2.86
75 x 125	2.22	2.11	2.01	1.94	1.87	1.81	2.04	1.93	1.84			
75 x 150	2.73	2.59	2.47	2.37	2.28	2.21	2.50	2.36	2.24	2.15	2.06	1.99
75 x 175	3.24	3.07	2.92	2.80	2.70	2.61	2.96	2.79	2.65	2.53	2.43	2.35
75 x 200	3.75	3.54	3.37	3.23	3.11	3.00	3.42	3.22	3.05	2.92	2.80	2.70
75 x 225	4.26	4.02	3.82	3.66	3.52	3.40	3.88	3.65	3.46	3.30	3.17	3.06

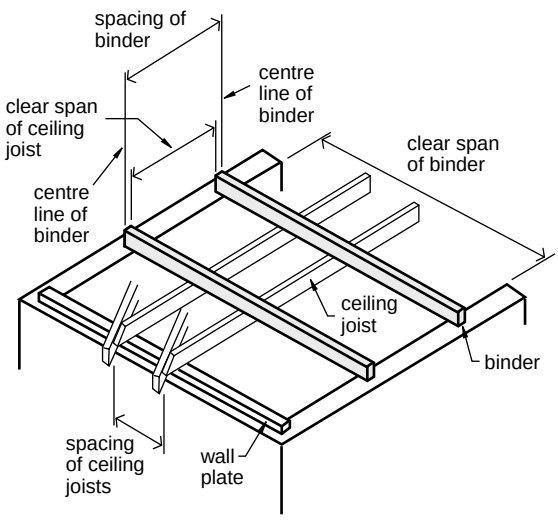

5. The section sizes for binders are either BS4471 basic sawn sizes with the tolerances of BS4471 or CLS/ALS sizes with BS4971 tolerances.

6. The minimum bearing length at supports for ceiling joists and binders shall be 35 mm.

7. No notches or holes shall be cut in binders unless checked by a competent person.

Table 2.8 Common or jack rafters for roofs having a pitch more than 15° but not more than 22.5° with access only for purposes of maintenance or repair. Imposed loading 0.75kN/m^2 (see paragraph 2.9)

Maximum clear span of rafter (m) Timber of strength class SC3 and SC4 (see Table 2.1)

	Dead Load [kN/m^2] excluding the self weight of the rafter								
	Not more than 0.50			More than 0.50 but not more than 0.75			More than 0.75 but not more than 1.00		
	Spacing of rafters (mm)								
Size of rafter (mm x mm)	400	450	600	400	450	600	400	450	600
SC3									
38 x 100	2.10	2.05	1.93	1.93	1.88	1.75	1.80	1.75	1.61
38 x 125	2.89	2.79	2.53	2.63	2.55	2.34	2.44	2.35	2.15
38 x 150	3.47	3.34	3.03	3.26	3.14	2.78	3.08	2.96	2.57
47 x 100	2.46	2.40	2.18	2.25	2.19	2.03	2.10	2.03	1.87
47 x 125	3.10	2.99	2.72	2.92	2.81	2.56	2.78	2.67	2.41
47 x 150	3.71	3.57	3.25	3.50	3.36	3.06	3.32	3.20	2.86
50 x 100	2.54	2.45	2.23	2.35	2.29	2.09	2.19	2.12	1.95
50 x 125	3.17	3.05	2.78	2.98	2.87	2.61	2.83	2.73	2.48
50 x 150	3.78	3.64	3.32	3.57	3.43	3.12	3.39	3.26	2.94
38 x 89	1.76	1.72	1.63	1.63	1.59	1.49	1.53	1.49	1.38
38 x 140	3.24	3.12	2.83	3.05	2.93	2.61	2.82	2.72	2.41
SC4									
38 x 100	2.42	2.33	2.11	2.28	2.19	1.99	2.16	2.08	1.88
38 x 125	3.01	2.90	2.64	2.83	2.73	2.48	2.69	2.59	2.35
38 x 150	3.60	3.47	3.16	3.39	3.26	2.97	3.22	3.10	2.82
47 x 100	2.59	2.49	2.27	2.44	2.35	2.13	2.32	2.23	2.02
47 x 125	3.22	3.11	2.83	3.04	2.92	2.66	2.89	2.78	2.53
47 x 150	3.85	3.71	3.38	3.63	3.50	3.18	3.45	3.32	3.02
50 x 100	2.64	2.54	2.32	2.49	2.40	2.18	2.37	2.28	2.07
50 x 125	3.29	3.17	2.89	3.10	2.98	2.72	2.95	2.83	2.58
50 x 150	3.93	3.78	3.45	3.70	3.57	3.25	3.52	3.39	3.09
38 x 89	2.16	2.07	1.88	2.03	1.95	1.77	1.92	1.85	1.68
38 x 140	3.37	3.24	2.95	3.17	3.05	2.77	3.01	2.90	2.63

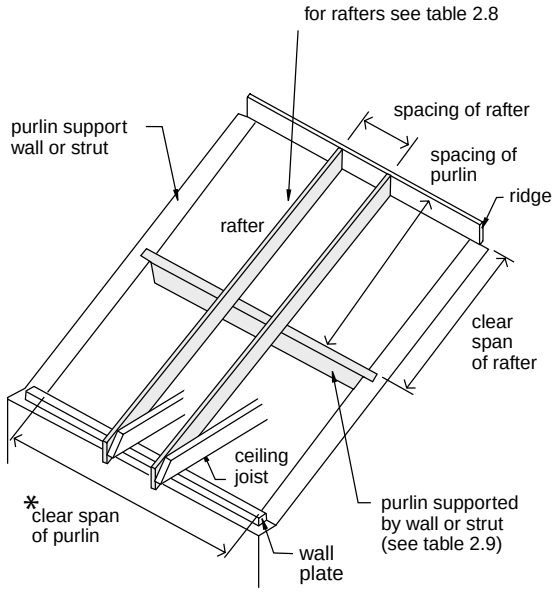

* take the clear span for the purlin as the clear dimension between supporting struts and/or walls

Notes to Tables 2.8 and 2.9

1. The sizes, spacings and spans given will support the dead loads stated in the table and imposed loads of 0.75kN/m^2, measured on plan or a concentrated load of 0.9kN.

2. The tables are applicable to purlins installed perpendicular to the roof slope, whereby any horizontal thrust sustained by the rafters is restrained by the ceiling joists, or by other means.

3. When the spans of rafters or purlins are unequal the section sizes shall be determined for each span or by the longest span.

4. The section sizes are either BS4471 basic sawn sizes with the tolerances of BS4471 or CLS/ALS sizes with BS4471 tolerances.

Table 2.9 Purlins supporting rafters to which Table 2.8 refers (Imposed loading 0.75kN/m^2)

Maximum clear span of purlin (m) Timber of strength class SC3 and SC4 (see Table 2.1)

	Dead Load [kN/m^2] excluding the self weight of the purlin																	
	Not more than 0.50						More than 0.50 but not more than 0.75						More than 0.75 but not more than 1.00					
	Spacing of purlins (mm)																	
Size of purlin (mm x mm)	1500	1800	2100	2400	2700	3000	1500	1800	2100	2400	2700	3000	1500	1800	2100	2400	2700	3000
47 x 150	1.86																	
47 x 175	2.17	2.03	1.92	1.82			2.04	1.90					1.93					
47 x 200	2.48	2.32	2.19	2.08	1.96	1.86	2.32	2.17	2.04	1.90			2.20	2.05	1.89			
47 x 225	2.78	2.60	2.46	2.33	2.19	2.07	2.61	2.44	2.28	2.13	2.00	1.89	2.47	2.28	2.11	1.97	1.85	
63 x 150	2.06	1.94	1.83				1.94	1.82					1.84					
63 x 175	2.41	2.26	2.13	2.03	1.95	1.87	2.26	2.12	2.00	1.91	1.82		2.14	2.01	1.90	1.80		
63 x 200	2.75	2.58	2.44	2.32	2.22	2.14	2.58	2.42	2.29	2.18	2.08	1.97	2.45	2.29	2.16	2.05	1.93	1.83
63 x 225	3.09	2.89	2.74	2.61	2.50	2.40	2.90	2.72	2.57	2.45	2.33	2.20	2.75	2.58	2.43	2.29	2.16	2.14
75 x 125	1.83																	
75 x 150	2.19	2.06	1.95	1.86			2.06	1.94	1.83				1.96	1.83				
75 x 175	2.56	2.40	2.27	2.17	2.08	2.00	2.41	2.26	2.13	2.03	1.95	1.87	2.28	2.14	2.02	1.92	1.84	
75 x 200	2.92	2.74	2.59	2.47	2.37	2.28	2.75	2.58	2.44	2.32	2.22	2.14	2.61	2.44	2.31	2.20	2.10	2.00
75 x 225	3.28	3.08	2.91	2.78	2.66	2.56	3.09	2.89	2.74	2.61	2.50	2.40	2.93	2.74	2.60	2.47	2.36	2.23
2 x 47 x 200	3.30	3.10	2.94	2.81	2.69	2.60	3.11	2.92	2.77	2.64	2.53	2.44	2.96	2.77	2.63	2.50	2.40	2.31
2 x 47 x 225	3.71	3.49	3.31	3.16	3.03	2.92	3.49	3.28	3.11	2.97	2.85	2.74	3.32	3.12	2.95	2.82	2.70	2.60
2 x 47 x 250	4.11	3.87	3.67	3.50	3.36	3.24	3.88	3.64	3.45	3.29	3.16	3.04	3.69	3.46	3.28	3.13	3.00	2.88
2 x 47 x 275	4.52	4.25	4.03	3.85	3.69	3.56	4.26	4.00	3.79	3.62	3.47	3.34	4.05	3.80	3.60	3.44	3.29	3.17
2 x 47 x 300	4.92	4.63	4.39	4.19	4.03	3.88	4.64	4.36	4.14	3.95	3.79	3.65	4.41	4.14	3.93	3.74	3.59	3.45
47 x 150	1.94	1.82																
47 x 175	2.27	2.12	2.01	1.91	1.83		2.13	1.99	1.88				2.02	1.89				
47 x 200	2.59	2.42	2.29	2.18	2.09	2.00	2.43	2.27	2.15	2.04	1.95	1.87	2.30	2.15	2.03	1.93	1.81	
47 x 225	2.91	2.72	2.58	2.45	2.35	2.25	2.73	2.56	2.42	2.30	2.20	2.11	2.59	2.42	2.28	2.17	2.03	1.82
63 x 150	2.16	2.02	1.91	1.82			2.03	1.90					1.92	1.80				
63 x 175	2.51	2.36	2.23	2.13	2.04	1.96	2.36	2.22	2.10	2.00	1.91	1.84	2.24	2.10	1.99	1.89	1.81	
63 x 200	2.87	2.69	2.55	2.43	2.33	2.24	2.70	2.53	2.39	2.28	2.18	2.10	2.56	2.40	2.27	2.16	2.06	1.98
63 x 225	3.22	3.02	2.86	2.73	2.61	2.52	3.03	2.84	2.69	2.56	2.45	2.36	2.88	2.70	2.55	2.43	2.32	2.23
75 x 125	1.91																	
75 x 150	2.29	2.15	2.04	1.94	1.86		2.16	2.02	1.91	1.82			2.05	1.92	1.82			
75 x 175	2.67	2.51	2.37	2.26	2.17	2.09	2.51	2.36	2.23	2.13	2.04	1.96	2.39	2.24	2.12	2.02	1.93	1.85
75 x 200	3.05	2.86	2.71	2.58	2.48	2.39	2.87	2.69	2.55	2.43	2.33	2.24	2.72	2.55	2.42	2.30	2.20	2.12
75 x 225	3.42	3.21	3.04	2.90	2.78	2.68	3.22	3.02	2.86	2.73	2.62	2.52	3.06	2.87	2.72	2.59	2.48	2.38
2 x 47 x 200	3.44	3.24	3.07	2.93	2.81	2.71	3.25	3.05	2.89	2.76	2.65	2.55	3.09	2.90	2.75	2.62	2.51	2.42
2 x 47 x 255	3.86	3.64	3.45	3.29	3.16	3.05	3.65	3.43	3.25	3.10	2.98	2.87	3.47	3.26	3.09	2.94	2.82	2.72
2 x 47 x 250	4.29	4.03	3.83	3.66	3.51	3.38	4.05	3.80	3.61	3.44	3.30	3.18	3.85	3.61	3.43	3.27	3.13	3.02
2 x 47 x 275	4.71	4.43	4.20	4.02	3.86	3.72	4.44	4.18	3.96	3.78	3.63	3.50	4.23	3.97	3.76	3.59	3.44	3.32
2 x 47 x 300	5.12	4.82	4.58	4.38	4.20	4.05	4.84	4.55	4.32	4.12	3.96	3.81	4.60	4.33	4.10	3.91	3.75	3.62

SC4

5. No notches or holes shall be cut in purlins unless checked by a competent person.

6. The minimum bearing length at supports shall be 35 mm for rafters and 50 mm for purlins.

Table 2.10 Common or jack rafters for roofs having a pitch more than 15° but not more than 22.5° with access only for the purposes of maintenance or repair. Imposed loading 1.00kN/m^2 (see paragraph 2.9)

Maximum clear span of rafter (m) Timber of strength class SC3 and SC4 (see Table 2.1)

	Dead Load [kN/m^2] excluding the self weight of the rafter								
	Not more than 0.50			More than 0.50 but not more than 0.75			More than 0.75 but not more than 1.00		
	Spacing of Rafters (mm)								
Size of rafter (mm x mm)	400	450	600	400	450	600	400	450	600
38 x 100	2.10	2.05	1.90	1.93	1.88	1.75	1.80	1.75	1.61
38 x 125	2.73	2.63	2.35	2.59	2.49	2.17	2.44	2.34	2.03
38 x 150	3.27	3.14	2.79	3.10	2.97	2.58	2.94	2.78	2.41
47 x 100	2.35	2.26	2.05	2.23	2.15	1.95	2.10	2.03	1.83
47 x 125	2.93	2.82	2.56	2.78	2.68	2.41	2.66	2.56	2.26
47 x 150	3.50	3.37	3.07	3.33	3.20	2.86	3.18	3.06	2.68
50 x 100	2.40	2.31	2.10	2.28	2.19	1.99	2.18	2.09	1.88
50 x 125	2.99	2.88	2.62	2.84	2.73	2.48	2.71	2.61	2.33
50 x 150	3.57	3.44	3.13	3.40	3.27	2.95	3.25	3.12	2.76
38 x 89	1.76	1.72	1.63	1.63	1.59	1.49	1.53	1.49	1.38
38 x 140	3.05	2.94	2.61	2.90	2.78	2.42	2.76	2.61	2.26
38 x 100	2.28	2.19	1.99	2.16	2.08	1.89	2.07	1.99	1.80
38 x 125	2.84	2.73	2.48	2.70	2.59	2.35	2.58	2.48	2.25
38 x 150	3.40	3.27	2.97	3.23	3.10	2.82	3.09	2.97	2.69
47 x 100	2.44	2.35	2.14	2.32	2.23	2.03	2.22	2.13	1.94
47 x 125	3.04	2.93	2.67	2.89	2.78	2.53	2.77	2.66	2.42
47 x 150	3.64	3.50	3.19	3.46	3.33	3.03	3.31	3.18	2.89
50 x 100	2.49	2.40	2.18	2.37	2.28	2.07	2.27	2.18	1.98
50 x 125	3.10	2.99	2.72	2.95	2.84	2.58	2.82	2.72	2.47
50 x 150	3.71	3.57	3.26	3.46	3.40	3.09	3.38	3.25	2.95
38 x 89	2.03	1.95	1.77	1.93	1.85	1.68	1.84	1.77	1.60
38 x 140	3.18	3.06	2.78	3.02	2.90	2.63	2.88	2.77	2.52

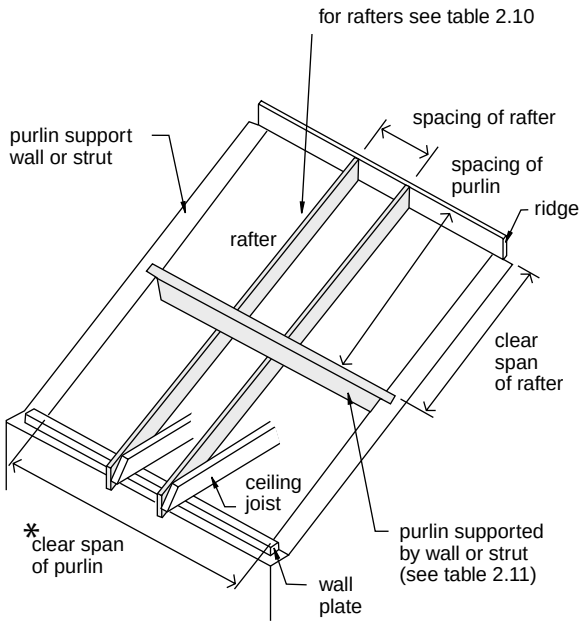

* take the clear span for the purlin as the clear dimension between supporting struts and/or walls

Notes to Tables 2.10 and 2.11

1. The sizes, spacings and spans given will support the dead loads stated in the table and imposed loads of 1.00kN/m^2, measured on plan or a concentrated load of 0.9 kN.

2. The tables are applicable to purlins installed perpendicular to the roof slope, whereby any horizontal thrust sustained by the rafters is restrained by the ceiling joists, or by other means.

3. When the spans of rafters or purlins are unequal the section sizes shall be determined for each span or by the longest span.

Table 2.11 Purlins supporting rafters to which Table 2.10 refers (Imposed loading 1.00kN/m^2)

Maximum clear span of purlin (m) Timber of strength class SC3 and SC4 (see Table 2.1)

	Dead Load [kN/m^2] excluding the self weight of the purlin																	
	Not more than 0.50						More than 0.50 but not more than 0.75						More than 0.75 but not more than 1.00					
	Spacing of purlins (mm)																	
Size of purlin (mm x mm)	1500	1800	2100	2400	2700	3000	1500	1800	2100	2400	2700	3000	1500	1800	2100	2400	2700	3000
SC3																		
47 x 150																		
47 x 175	2.04	1.91					1.93	1.80					1.84					
47 x 200	2.33	2.18	2.05	1.91			2.20	2.05	1.89				2.10	1.92				
47 x 225	2.62	2.45	2.28	2.13	2.01	1.90	2.48	2.29	2.12	1.97	1.86		2.35	2.14	1.98	1.84		
63 x 150	1.94	1.82					1.84											
63 x 175	2.27	2.12	2.01	1.91	1.83		2.15	2.01	1.90	1.81			2.05	1.92	1.81			
63 x 200	2.59	2.42	2.29	2.18	2.09	1.98	2.45	2.30	2.17	2.06	1.94	1.83	2.30	2.19	2.06	1.92	1.81	
63 x 225	2.91	2.72	2.58	2.45	2.33	2.21	2.76	2.58	2.44	2.30	2.16	2.05	2.63	2.46	2.30	2.15	2.02	1.91
75 x 150	2.07	1.94	1.83				1.96	1.84					1.87					
75 x 175	2.41	2.26	2.14	2.04	1.95	1.88	2.29	2.14	2.03	1.93	1.85		2.18	2.04	1.93	1.84		
75 x 200	2.75	2.58	2.44	2.33	2.23	2.14	2.61	2.45	2.31	2.20	2.11	2.01	2.49	2.33	2.20	2.10	1.98	1.88
75 x 225	3.09	2.90	2.74	2.61	2.50	2.41	2.93	2.75	2.60	2.48	2.36	2.24	2.80	2.62	2.48	2.35	2.21	2.09
2 x 47 x 200	3.12	2.93	2.77	2.65	2.54	2.44	2.96	2.78	2.63	2.51	2.40	2.31	2.83	2.65	2.51	2.39	2.29	2.21
2 x 47 x 225	3.50	3.29	3.18	2.97	2.85	2.75	3.33	3.12	2.96	2.82	2.70	2.60	3.18	2.98	2.82	2.69	2.58	2.47
2 x 47 x 250	3.88	3.65	3.46	3.30	3.17	3.05	3.69	3.47	3.28	3.13	3.00	2.89	3.53	3.31	3.14	2.99	2.86	2.73
2 x 47 x 275	4.27	4.01	3.80	3.63	3.48	3.35	4.06	3.81	3.61	3.44	3.30	3.17	3.88	3.64	3.45	3.28	3.15	2.98
2 x 47 x 300	4.65	4.37	4.14	3.95	3.79	3.65	4.42	4.15	3.93	3.75	3.60	3.46	4.23	4.00	3.76	3.58	3.41	3.24
SC4																		
47 x 150	1.83																	
47 x 175	2.13	2.00	1.88				2.02	1.89					1.93					
47 x 200	2.44	2.28	2.15	2.05	1.96	1.88	2.31	2.16	2.04	1.93	1.82		2.20	2.05	1.94			
47 x 225	2.74	2.56	2.42	2.30	2.20	2.11	2.59	2.43	2.29	2.17	2.04	1.83	2.47	2.31	2.18	2.02		
63 x 150	2.03	1.90	1.80				1.93	1.81					1.84					
63 x 175	2.37	2.22	2.10	2.00	1.91	1.84	2.25	2.10	1.99	1.89	1.81		2.14	2.01	1.90	1.80		
63 x 200	2.70	2.53	2.40	2.28	2.19	2.10	2.57	2.40	2.27	2.16	2.07	1.99	2.45	2.29	2.16	2.06	1.97	1.89
63 x 225	3.04	2.85	2.70	2.57	2.46	2.36	2.88	2.70	2.55	2.43	2.32	2.23	2.75	2.58	2.43	2.31	2.21	2.12
75 x 125	1.80																	
75 x 150	2.16	2.03	1.92	1.83			2.05	1.92	1.82				1.96	1.83				
75 x 175	2.52	2.36	2.24	2.13	2.04	1.96	2.39	2.24	2.12	2.02	1.93	1.86	2.28	2.14	2.02	1.92	1.84	
75 x 200	2.87	2.70	2.55	2.43	2.33	2.24	2.73	2.56	2.42	2.31	2.21	2.12	2.61	2.44	2.31	2.20	2.10	2.02
75 x 225	3.23	3.03	2.87	2.74	2.62	2.52	3.07	2.88	2.72	2.59	2.48	2.39	2.93	2.75	2.60	2.47	2.36	2.27
2 x 47 x 200	3.25	3.06	2.90	2.76	2.65	2.55	3.09	2.90	2.75	2.62	2.52	2.42	2.96	2.77	2.63	2.50	2.40	2.31
2 x 47 x 225	3.65	3.43	3.26	3.11	2.98	2.87	3.47	3.26	3.09	2.95	2.83	2.72	3.32	3.12	2.95	2.82	2.70	2.60
2 x 47 x 250	4.05	3.81	3.61	3.45	3.31	3.19	3.85	3.62	3.43	3.27	3.14	3.02	3.69	3.46	3.28	3.13	3.00	2.88
2 x 47 x 275	4.45	4.19	3.97	3.79	3.64	3.50	4.23	3.98	3.77	3.60	3.45	3.32	4.05	3.80	3.60	3.44	3.29	3.17
2 x 47 x 300	4.85	4.56	4.33	4.13	3.96	3.82	4.61	4.33	4.11	3.92	3.76	3.62	4.41	4.14	3.93	3.75	3.59	3.46

4. The section sizes are either BS4471 basic sawn sizes with the tolerances of BS4471 or CLS/ALS sizes with BS4471 tolerances.

5. No notches or holes shall be cut in purlins unless checked by a competent person.

6. The minimum bearing length at supports shall be 35 mm for rafters and 50 mm for purlins.

Table 2.12 Common or jack rafters for roofs having a pitch more than 22.5° but not more than 30° with access only for purposes of maintenance or repair. Imposed loading 0.75kN/m^2 (see paragraph 2.9)

Maximum clear span of rafter (m) Timber of strength class SC3 and SC4 (see Table 2.1)

	Dead Load [kN/m^2] excluding the self weight of the rafter								
	Not more than 0.50			More than 0.50 but not more than 0.75			More than 0.75 but not more than 1.00		
	Spacing of rafters (mm)								
Size of rafter (mm x mm)	400	450	600	400	450	600	400	450	600
SC3									
38 x 100	2.18	2.13	2.01	2.01	1.96	1.82	1.88	1.82	1.68
38 x 125	2.97	2.86	2.60	2.74	2.66	2.44	2.54	2.46	2.25
38 x 150	3.55	3.42	3.11	3.34	3.21	2.92	3.17	3.04	2.72
47 x 100	2.55	2.46	2.23	2.35	2.28	2.10	2.18	2.12	1.95
47 x 125	3.18	3.06	2.79	2.99	2.88	2.62	2.84	2.73	2.48
47 x 150	3.80	3.66	3.33	3.57	3.44	3.13	3.39	3.27	2.97
50 x 100	2.60	2.51	2.28	2.45	2.36	2.14	2.28	2.21	2.03
50 x 125	3.24	3.12	2.84	3.05	2.93	2.67	2.89	2.79	2.53
50 x 150	3.87	3.73	3.40	3.65	3.51	3.20	3.46	3.33	3.03
38 x 89	1.82	1.79	1.69	1.69	1.65	1.55	1.59	1.55	1.44
38 x 140	3.32	3.19	2.90	3.12	3.00	2.72	2.94	2.84	2.55
SC4									
38 x 100	2.48	2.38	2.17	2.33	2.24	2.03	2.21	2.12	1.93
38 x 125	3.08	2.97	2.70	2.90	2.79	2.53	2.75	2.65	2.40
38 x 150	3.69	3.55	3.23	3.47	3.34	3.04	3.29	3.17	2.88
47 x 100	2.65	2.55	2.32	2.49	2.40	2.18	2.37	2.28	2.07
47 x 125	3.30	3.18	2.90	3.11	2.99	2.72	2.95	2.84	2.58
47 x 150	3.94	3.80	3.46	3.71	3.58	3.26	3.53	3.40	3.09
50 x 100	2.71	2.61	2.37	2.55	2.45	2.23	2.42	2.32	2.11
50 x 125	3.37	3.24	2.96	3.17	3.05	2.78	3.01	2.90	2.63
50 x 150	4.02	3.87	3.53	3.79	3.65	3.32	3.60	3.46	3.15
38 x 89	2.21	2.12	1.93	2.07	1.99	1.81	1.97	1.89	1.72
38 x 140	3.45	3.32	3.02	3.24	3.12	2.84	3.08	2.96	2.69

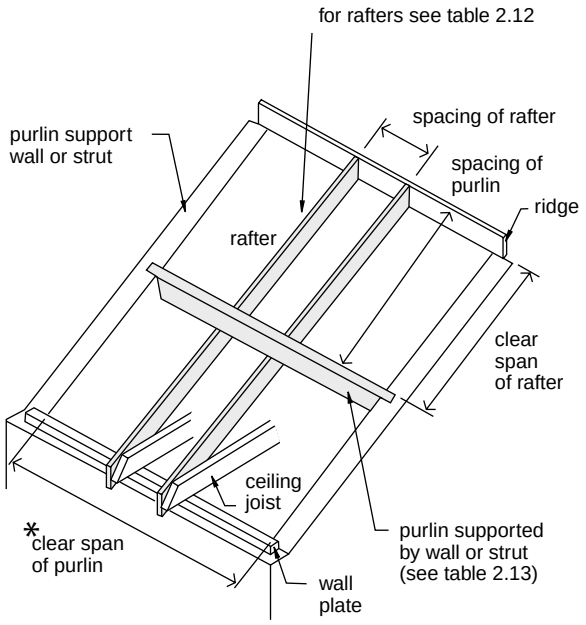

*take the clear span for the purlin as the clear dimension between supporting struts and/or walls

Notes to Tables 2.12 and 2.13

1. The sizes, spacings and spans given will support the dead loads stated in the table and imposed loads of 0.75kN/m2, measured on plan or a concentrated load of 0.9kN.

2. The tables are applicable to purlins installed perpendicular to the roof slope, whereby any horizontal thrust sustained by the rafters is restrained by the ceiling joists, or by other means.

3. When the spans of rafters or purlins are unequal the section sizes shall be determined for each span or by the longest span.

Table 2.13 Purlins supporting rafters to which Table 2.12 refers (Imposed loading 0.75kN/m^2)

Maximum clear span of purlin (m) Timber of strength class SC3 and SC4 (see Table 2.1)

	Dead Load [kN/m^2] excluding the self weight of the purlin																	
	Not more than 0.50						More than 0.50 but not more than 0.75						More than 0.75 but not more than 1.00					
	Spacing of purlins (mm)																	
Size of purlin (mm x mm)	1500	1800	2100	2400	2700	3000	1500	1800	2100	2400	2700	3000	1500	1800	2100	2400	2700	3000
47 x 150	1.91																	
47 x 175	2.22	2.08	1.97	1.87			2.08	1.95	1.84				1.97	1.84				
47 x 200	2.54	2.38	2.25	2.14	2.03	1.92	2.38	2.23	2.10	1.97	1.85		2.25	2.10	1.95	1.82		
47 x 225	2.85	2.67	2.53	2.40	2.27	2.15	2.68	2.50	2.36	2.20	2.07	1.96	2.53	2.36	2.18	2.03	1.91	1.81
63 x 150	2.12	1.98	1.88				1.99	1.86					1.88					
63 x 175	2.47	2.31	2.19	2.09	2.00	1.92	2.32	2.17	2.05	1.95	1.87		2.19	2.05	1.94	1.85		
63 x 200	2.81	2.64	2.50	2.38	2.28	2.19	2.64	2.48	2.34	2.23	2.13	2.04	2.50	2.35	2.22	2.11	1.99	1.89
63 x 225	3.16	2.97	2.81	2.68	2.56	2.47	2.97	2.78	2.63	2.51	2.40	2.28	2.82	2.64	2.49	2.37	2.23	2.11
75 x 125	1.88																	
75 x 150	2.25	2.11	2.00	1.91	1.83		2.11	1.98	1.87				2.00	1.88				
75 x 175	2.62	2.46	2.33	2.22	2.13	2.05	2.46	2.31	2.19	2.08	1.99	1.92	2.33	2.19	2.07	1.97	1.89	1.81
75 x 200	2.99	2.81	2.66	2.54	2.43	2.34	2.81	2.64	2.50	2.38	2.28	2.19	2.67	2.50	2.36	2.25	2.15	2.07
75 x 225	3.36	3.15	2.99	2.85	2.73	2.63	3.16	2.96	2.80	2.67	2.56	2.46	3.00	2.81	2.66	2.53	2.42	2.31
2 x 47 x 200	3.38	3.18	3.01	2.88	2.76	2.66	3.18	2.99	2.83	2.70	2.59	2.50	3.02	2.84	2.69	2.56	2.46	2.36
2 x 47 x 225	3.80	3.57	3.39	3.23	3.10	2.99	3.57	3.36	3.18	3.04	2.91	2.81	3.39	3.19	3.02	2.88	2.76	2.66
2 x 47 x 250	4.21	3.96	3.76	3.59	3.44	3.32	3.97	3.73	3.53	3.37	3.24	3.12	3.77	3.54	3.35	3.20	3.06	2.95
2 x 47 x 275	4.62	4.35	4.13	3.94	3.79	3.65	4.36	4.09	3.88	3.71	3.56	6.42	4.14	3.89	3.68	3.51	3.37	3.24
2 x 47 x 300	5.04	4.74	4.50	4.30	4.13	3.98	4.75	4.46	4.23	4.04	3.88	3.73	4.51	4.24	4.01	3.83	3.67	3.54
47 x 150	1.99	1.87					1.87											
47 x 175	2.32	2.18	2.06	1.96	1.87	1.80	2.18	2.04	1.93	1.83			2.06	1.93	1.82			
47 x 200	2.65	2.48	2.35	2.24	2.14	2.06	2.49	2.33	2.20	2.09	2.00	1.92	2.36	2.20	2.08	1.98	1.89	
47 x 225	2.98	2.79	2.64	2.52	2.41	2.31	2.80	2.62	2.47	2.35	2.25	2.16	2.65	2.48	2.34	2.22	2.12	1.94
63 x 125	1.84																	
63 x 150	2.21	2.07	1.96	1.87			2.08	1.95	1.84				1.97	1.84				
63 x 175	2.57	2.42	2.29	2.18	2.09	2.01	2.42	2.27	2.15	2.04	1.96	1.88	2.29	2.15	2.03	1.93	1.85	
63 x 200	2.94	2.76	2.61	2.49	2.39	2.30	2.76	2.59	2.45	2.33	2.24	2.15	2.62	2.45	2.32	2.21	2.11	2.03
63 x 225	3.30	3.10	2.93	2.80	2.68	2.58	3.10	2.91	2.75	2.62	2.51	2.42	2.94	2.76	2.61	2.48	2.38	2.28
75 x 125	1.96	1.84					1.84											
75 x 150	2.35	2.20	2.08	1.99	1.91	1.84	2.21	2.07	1.96	1.87			2.09	1.96	1.86			
75 x 175	2.73	2.57	2.43	2.32	2.22	2.14	2.57	2.41	2.28	2.18	2.09	2.01	2.44	2.29	2.16	2.06	1.97	1.90
75 x 200	3.12	2.93	2.78	2.65	2.54	2.45	2.93	2.75	2.61	2.49	2.38	2.29	2.79	2.61	2.47	2.35	2.26	2.17
75 x 225	3.50	3.29	3.12	2.98	2.86	2.75	3.30	3.10	2.93	2.80	2.68	2.58	3.13	2.94	2.78	2.65	2.54	2.44
2 x 47 x 200	3.52	3.31	3.15	3.00	2.88	2.78	3.32	3.12	2.96	2.82	2.71	2.61	3.15	2.96	2.81	2.68	2.57	2.47
2 x 47 x 225	3.96	3.72	3.53	3.38	3.24	3.12	3.73	3.51	3.32	3.17	3.05	2.93	3.54	3.33	3.16	3.01	2.89	2.78
2 x 47 x 250	4.39	4.13	3.92	3.75	3.60	3.47	4.14	3.89	3.69	3.52	3.38	3.26	3.93	3.69	3.50	3.34	3.21	3.09
2 x 47 x 275	4.82	4.54	4.31	4.12	3.95	3.81	4.54	4.27	4.05	3.87	3.72	3.58	4.32	4.06	3.85	3.67	3.52	3.39
2 x 47 x 300	5.25	4.94	4.69	4.48	4.31	4.15	4.95	4.66	4.42	4.22	4.05	3.90	4.71	4.42	4.19	4.00	3.84	3.70

SC3

SC4

4. The section sizes are either BS4471 basic sawn sizes with the tolerances of BS4471 or CLS/ALS sizes with BS4471 tolerances.

5. No notches or holes shall be cut in purlins unless checked by a competent person.

6. The minimum bearing length at supports shall be 35 mm for rafters and 50mm for purlins.

Table 2.14 Common or jack rafters for roofs having a pitch more than 22.5° but not more than 30° with access only for purposes of maintenance or repair. Imposed loading 1.00kN/m^2 (see paragraph 2.9)

Maximum clear span of rafter (m) Timber of strength class SC3 and SC4 (see Table 2.1)

	Dead Load [kN/m^2] excluding the self weight of the rafter								
	Not more than 0.50			More than 0.50 but not more than 0.75			More than 0.75 but not more than 1.00		
	Spacing of rafters (mm)								
Size of rafter (mm x mm)	400	450	600	400	450	600	400	450	600
SC3									
38 x 100	2.18	2.13	1.96	2.01	1.96	1.82	1.88	1.82	1.68
38 x 125	2.80	2.69	2.45	2.65	2.55	2.30	2.53	2.44	2.15
38 x 150	3.35	3.22	2.93	3.18	3.06	2.73	3.03	2.92	2.55
47 x 100	2.41	2.32	2.11	2.28	2.20	2.00	2.18	2.10	1.90
47 x 125	3.00	2.89	2.63	2.85	2.74	2.49	2.72	2.62	2.37
47 x 150	3.59	3.46	3.14	3.41	3.28	2.98	3.25	3.13	2.83
50 x 100	2.46	2.37	2.15	2.33	2.24	2.04	2.23	2.14	1.94
50 x 125	3.06	2.95	2.68	2.91	2.80	2.54	2.78	2.67	2.43
50 x 150	3.66	3.52	3.21	3.48	3.34	3.04	3.32	3.20	2.90
38 x 89	1.82	1.79	1.69	1.69	1.65	1.55	1.59	1.55	1.44
38 x 140	3.13	3.01	2.74	2.97	2.85	2.56	2.83	2.72	2.29
SC4									
38 x 100	2.34	2.25	2.04	2.21	2.13	1.93	2.11	2.03	1.84
38 x 125	2.91	2.80	2.55	2.76	2.66	2.41	2.64	2.53	2.30
38 x 150	3.48	3.35	3.05	3.30	3.18	2.89	3.16	3.04	2.76
47 x 100	2.51	2.41	2.19	2.38	2.29	2.08	2.27	2.18	1.98
47 x 125	3.12	3.00	2.73	2.96	2.85	2.59	2.83	2.72	2.47
47 x 150	3.73	3.59	3.27	3.54	3.41	3.10	3.38	3.26	2.96
50 x 100	2.56	2.46	2.24	2.42	2.33	2.12	2.32	2.23	2.02
50 x 125	3.18	3.06	2.79	3.05	2.91	2.64	2.89	2.78	2.52
50 x 150	3.80	3.66	3.34	3.61	3.48	3.16	3.45	3.32	3.02
38 x 89	2.08	2.00	1.82	1.97	1.90	1.72	1.88	1.81	1.64
38 x 140	3.25	3.13	2.85	3.09	2.97	2.70	2.95	2.84	2.57

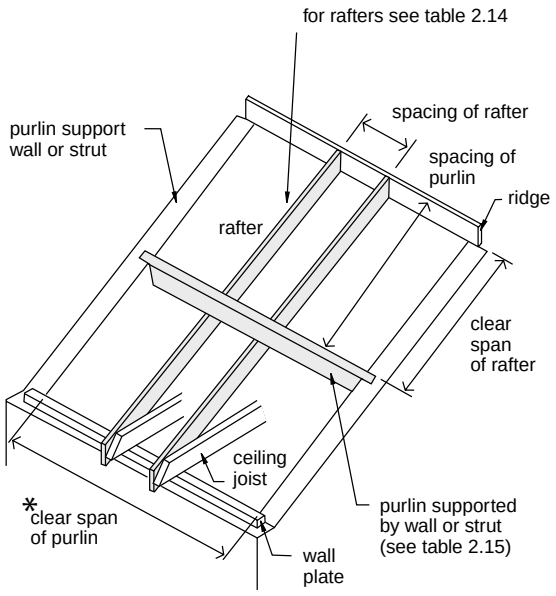

*take the clear span for the purlin as the clear dimension between supporting struts and/or walls

Notes to Tables 2.14 and 2.15

1. The sizes, spacings and spans given will support the dead loads stated in the table and imposed loads of 1.00kN/m^2, measured on plan or a concentrated load of 0.9 kN.

2. The tables are applicable to purlins installed perpendicular to the roof slope, whereby any horizontal thrust sustained by the rafters is restrained by the ceiling joists, or by other means.

3. When the spans of rafters or purlins are unequal the section sizes shall be determined for each span or by the longest span.

Table 2.15 Purlins supporting rafters to which Table 2.14 refers (Imposed loading 1.00kN/m^2)

Maximum clear span of purlin (m) Timber of strength class SC3 and SC4 (see Table 2.1)

	Dead Load [kN/m^2] excluding the self weight of the purlin																	
	Not more than 0.50						More than 0.50 but not more than 0.75						More than 0.75 but not more than 1.00					
	Spacing of purlins (mm)																	
Size of purlin (mm x mm)	1500	1800	2100	2400	2700	3000	1500	1800	2100	2400	2700	3000	1500	1800	2100	2400	2700	3000
47 x 150																		
47 x 175	2.09	1.96	1.85				1.98	1.85					1.88					
47 x 200	2.39	2.24	2.11	1.98	1.86		2.26	2.11	1.96	1.83			2.15	1.98	1.83			
47 x 225	2.69	2.51	2.37	2.21	2.08	1.97	2.54	2.37	2.19	2.05	1.92	1.82	2.42	2.22	2.05	1.91		
63 x 150	2.00	1.87					1.89						1.88					
63 x 175	2.33	2.18	2.06	1.96	1.88	1.80	2.20	2.06	1.95	1.85			2.10	1.96	1.85			
63 x 200	2.66	2.49	2.35	2.24	2.14	2.05	2.51	2.35	2.22	2.12	2.00	1.90	2.40	2.24	2.12	1.99	1.87	
63 x 225	2.98	2.80	2.65	2.52	2.41	2.29	2.83	2.65	2.50	2.38	2.24	2.12	2.69	2.52	2.38	2.22	2.09	1.98
75 x 150	2.12	1.99	1.88				2.01	1.88					1.92					
75 x 175	2.47	2.32	2.20	2.09	2.00	1.93	2.34	2.20	2.08	1.98	1.89	1.82	2.24	2.09	1.98	1.88	1.80	
75 x 200	2.82	2.65	2.51	2.39	2.29	2.20	2.68	2.51	2.37	2.26	2.16	2.08	2.55	2.39	2.26	2.15	2.05	1.94
75 x 225	3.17	2.98	2.82	2.68	2.57	2.47	3.01	2.82	2.67	2.54	2.43	2.32	2.87	2.69	2.54	2.42	2.29	2.17
2 x 47 x 200	3.20	3.00	2.85	2.72	2.60	2.51	3.03	2.85	2.70	2.57	2.74	2.37	2.90	2.72	2.57	2.45	2.35	2.26
2 x 47 x 225	3.59	3.37	3.20	3.05	2.93	2.82	3.41	3.20	3.03	2.89	2.77	2.67	3.25	3.05	2.89	2.76	2.64	2.54
2 x 47 x 250	3.98	3.74	3.55	3.39	3.25	3.13	3.78	3.55	3.36	3.21	3.08	2.96	3.61	3.39	3.21	3.06	2.93	2.82
2 x 47 x 275	4.37	4.11	3.90	3.72	3.57	3.44	4.15	3.90	3.70	3.53	3.38	3.26	3.97	3.73	3.53	3.36	3.22	3.08
2 x 47 x 300	4.77	4.48	4.25	4.06	3.89	3.75	4.53	4.25	4.03	3.84	3.69	3.55	4.32	4.06	3.85	3.67	3.51	3.35
47 x 150	1.88																	
47 x 175	2.19	2.05	1.94	1.84			2.07	1.94	1.82				1.97	1.84				
47 x 200	2.50	2.34	2.21	2.10	2.01	1.93	2.37	2.21	2.09	1.99	1.90		2.25	2.11	1.99	1.89		
47 x 225	2.81	2.63	2.49	2.37	2.26	2.17	2.66	2.50	2.35	2.23	2.13	1.97	2.53	2.37	2.23	2.12	1.91	
63 x 150	2.09	1.95	1.85				1.98	1.85					1.88					
63 x 175	2.43	2.28	2.16	2.05	1.97	1.89	2.30	2.16	2.04	1.94	1.86		2.20	2.06	1.94	1.85		
63 x 200	2.77	2.60	2.46	2.35	2.25	2.16	2.63	2.46	2.33	2.22	2.12	2.04	2.51	2.35	2.22	2.11	2.02	1.94
63 x 225	3.12	2.92	2.77	2.64	2.52	2.43	2.95	2.77	2.62	2.49	2.39	2.29	2.82	2.64	2.49	2.37	2.27	2.18
75 x 125	1.85																	
75 x 150	2.22	2.08	1.97	1.88			2.10	1.97	1.86				2.01	1.88				
75 x 175	2.58	2.42	2.29	2.19	2.10	2.02	2.45	2.30	2.17	2.07	1.96	1.91	2.34	2.19	2.07	1.97	1.89	1.81
75 x 200	2.95	2.77	2.62	2.50	2.39	2.30	2.80	2.62	2.48	2.36	2.26	2.18	2.67	2.50	2.37	2.25	2.16	2.07
75 x 225	3.31	3.11	2.94	2.81	2.70	2.59	3.14	2.95	2.79	2.66	2.55	2.45	3.00	2.81	2.66	2.53	2.42	2.33
2 x 47 x 200	3.33	3.13	2.97	2.84	2.72	2.62	3.17	2.97	2.82	2.69	2.58	2.48	3.03	2.84	2.69	2.56	2.46	2.37
2 x 47 x 225	3.74	3.52	3.34	3.19	3.06	2.95	3.56	3.34	3.17	3.02	2.90	2.79	3.40	3.19	3.02	2.88	2.76	2.66
2 x 47 x 250	4.15	3.91	3.71	3.54	3.40	3.27	3.95	3.71	3.52	3.35	3.22	3.10	3.77	3.51	3.36	3.20	3.07	2.95
2 x 47 x 275	4.56	4.29	4.07	3.89	3.73	3.60	4.34	4.07	3.86	3.69	3.54	3.41	4.14	3.89	3.69	3.52	3.37	3.25
2 x 47 x 300	4.97	4.67	4.44	4.24	4.07	3.92	4.72	4.44	4.21	4.02	3.85	3.71	4.52	4.24	4.02	3.83	3.68	3.54

SC3

SC4

4. The section sizes are either BS4471 basic sawn sizes with the tolerances of BS4471 or CLS/ALS sizes with BS4471 tolerances.

5. No notches or holes shall be cut in purlins unless checked by a competent person.

6. The minimum bearing length at supports shall be 35 mm for rafters and 50 mm for purlins.

Table 2.16 Common or jack rafters for roofs having a pitch more than 30° but not more than 45° with access only for purposes of maintenance or repair. Imposed loading 0.75kN/m^2 (see paragraph 2.9)

Maximum clear span of rafter (m) Timber of strength class SC3 and SC4 (see Table 2.1)

	Dead Load [kN/m^2] excluding the self weight of the rafter								
	Not more than 0.50			More than 0.50 but not more than 0.75			More than 0.75 but not more than 1.00		
	Spacing of rafters (mm)								
Size of rafter (mm x mm)	400	450	600	400	450	600	400	450	600
SC3									
38 x 100	2.28	2.23	2.10	2.10	2.05	1.91	1.96	1.91	1.76
38 x 125	3.07	2.95	2.69	2.87	2.77	2.52	2.65	2.56	2.35
38 x 150	3.67	3.53	3.22	3.44	3.31	3.01	3.26	3.14	2.85
47 x 100	2.64	2.54	2.31	2.45	2.38	2.17	2.28	2.21	2.04
47 x 125	3.29	3.17	2.88	3.09	2.97	2.70	2.92	2.81	2.56
47 x 150	3.93	3.78	3.45	3.69	3.55	3.23	3.50	3.37	3.06
50 x 100	2.69	2.59	2.36	2.53	2.43	2.21	2.38	2.30	2.09
50 x 125	3.35	3.23	2.94	3.15	3.03	2.76	2.98	2.87	2.61
50 x 150	4.00	3.86	3.52	3.76	3.62	3.30	3.57	3.44	3.13
38 x 89	1.91	1.87	1.77	1.77	1.73	1.62	1.67	1.62	1.50
38 x 140	3.43	3.30	3.01	3.22	3.10	2.82	3.05	2.93	2.66
SC4									
38 x 100	2.56	2.47	2.24	2.40	2.31	2.10	2.28	2.19	1.99
38 x 125	3.19	3.07	2.80	2.99	2.88	2.62	2.84	2.73	2.48
38 x 150	3.81	3.67	3.35	3.58	3.45	3.14	3.39	3.27	2.97
47 x 100	2.74	2.64	2.41	2.58	2.48	2.25	2.44	2.35	2.13
47 x 125	3.41	3.29	3.00	3.21	3.09	2.81	3.04	2.93	2.66
47 x 150	4.08	3.93	3.59	3.83	3.69	3.36	3.64	3.50	3.19
50 x 100	2.80	2.70	2.45	2.63	2.53	2.30	2.49	2.40	2.18
50 x 125	3.48	3.35	3.06	3.27	3.15	2.87	3.10	2.99	2.72
50 x 150	4.16	4.01	3.66	3.91	3.77	3.43	3.71	3.57	3.25
38 x 89	2.28	2.20	2.00	2.14	2.06	1.87	2.03	1.95	1.77
38 x 140	2.56	3.43	3.13	3.35	3.22	2.93	3.17	3.05	2.77

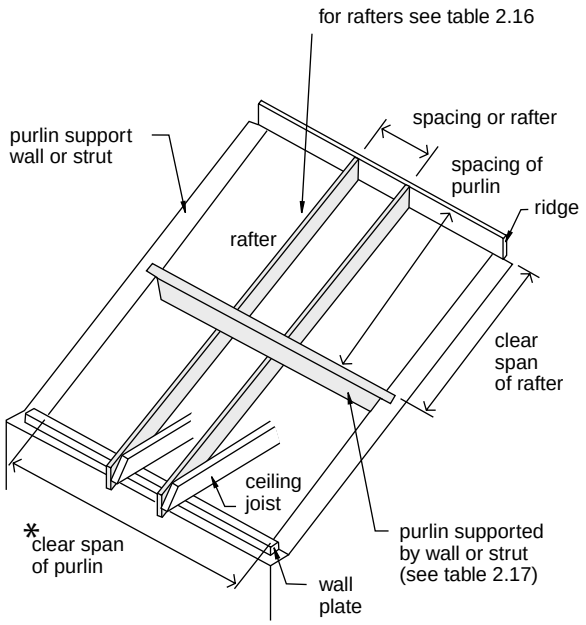

*take the clear span for the purlin as the clear dimension between supporting struts and/or walls

Notes to Tables 2.16 and 2.17

1. The sizes, spacings and spans given will support the dead loads stated in the table and imposed loads of 0.75kN/m^2, measured on plan or a concentrated load of 0.9 kN.

2. The tables are applicable to purlins installed perpendicular to the roof slope, whereby any horizontal thrust sustained by the rafters is restrained by the ceiling joists, or by other means.

3. When the spans of rafters or purlins are unequal the section sizes shall be determined for each span or by the longest span.

Table **2.17** Purlins supporting rafters to which Table 2.16 refers (Imposed loading 0.75kN/m^2)

Maximum clear span of purlin (m) Timber of strength class SC3 and SC4 (see Table 2.1)

	Dead Load [kN/m^2] excluding the self weight of the purlin																	
	Not more than 0.50						More than 0.50 but not more than 0.75						More than 0.75 but not more than 1.00					
	Spacing of purlins (mm)																	
Size of purlin (mm x mm)	1500	1800	2100	2400	2700	3000	1500	1800	2100	2400	2700	3000	1500	1800	2100	2400	2700	3000
SC3																		
47 x 150	1.98	1.85					1.85											
47 x 175	2.30	2.16	2.04	1.94	1.86		2.16	2.02	1.91	1.81			2.04	1.91				
47 x 200	2.63	2.46	2.33	2.22	2.12	2.03	2.46	2.30	2.18	2.07	1.95	1.84	2.33	2.18	2.04	1.91		
47 x 225	2.96	2.77	2.62	2.49	2.39	2.26	2.77	2.59	2.45	2.31	2.17	2.06	2.62	2.45	2.28	2.13	2.00	1.90
63 x 125	1.83																	
63 x 150	2.19	2.06	1.95	1.85			2.05	1.93	1.82				1.94	1.82				
63 x 175	2.55	2.40	2.27	2.16	2.07	1.99	2.39	2.24	2.12	2.02	1.94	1.86	2.27	2.12	2.01	1.91	1.83	
63 x 200	2.91	2.74	2.59	2.47	2.37	2.28	2.73	2.56	2.42	2.31	2.21	2.13	2.59	2.42	2.29	2.18	2.09	1.98
63 x 225	3.28	3.07	2.91	2.78	2.66	2.56	3.07	2.88	2.73	2.60	2.49	2.39	2.91	2.72	2.58	2.45	2.33	2.21
75 x 125	1.94	1.82					1.82											
75 x 150	2.33	2.19	2.07	1.97	1.89	1.82	2.18	2.05	1.94	1.85			2.07	1.94	1.83			
75 x 175	2.71	2.55	2.41	2.30	2.21	2.12	2.55	2.39	2.26	2.15	2.06	1.99	2.41	2.26	2.14	2.04	1.95	1.87
75 x 200	3.10	2.91	2.75	2.63	2.52	2.43	2.91	2.73	2.58	2.46	2.36	2.27	2.75	2.58	2.44	2.33	2.23	2.14
75 x 225	3.48	3.27	3.10	2.95	2.83	2.73	3.26	3.06	2.90	2.77	2.65	2.55	3.09	2.90	2.74	2.61	2.50	2.41
2 x 47 x 200	3.50	3.29	3.12	2.98	2.86	2.76	3.29	3.09	2.93	2.80	2.68	2.58	3.12	2.93	2.77	2.65	2.54	2.44
2 x 47 x 225	3.93	3.69	3.51	3.35	3.21	3.10	3.69	3.47	3.29	3.14	3.01	2.90	3.50	3.29	3.12	2.97	2.85	2.75
2 x 47 x 250	4.36	4.10	3.89	3.72	3.57	3.44	4.10	3.85	3.65	3.49	3.35	3.22	3.89	3.65	3.46	3.30	3.17	3.05
2 x 47 x 275	4.78	4.50	4.27	4.08	3.92	3.78	4.50	4.23	4.01	3.83	3.68	3.54	4.27	4.01	3.80	3.63	3.48	3.35
2 x 47 x 300	5.21	4.90	4.66	4.45	4.27	4.12	4.90	4.61	4.37	4.18	4.01	3.86	4.65	4.37	4.14	3.96	3.79	3.65
SC4																		
47 x 150	2.06	1.94	1.83				1.93	1.81					1.83					
47 x 175	2.41	2.26	2.13	2.03	1.95	1.87	2.26	2.11	2.00	1.90	1.82		2.13	2.00	1.88			
47 x 200	2.75	2.58	2.44	2.32	2.22	2.14	2.57	2.41	2.28	2.17	2.08	1.99	2.44	2.28	2.15	2.05	1.96	1.88
47 x 225	3.09	2.89	2.74	2.61	2.50	2.40	2.89	2.71	2.56	2.44	2.33	2.24	2.74	2.56	2.42	2.30	2.20	2.11
63 x 125	1.91																	
63 x 150	2.29	2.15	2.03	1.94	1.86		2.15	2.01	1.90	1.81			2.03	1.90	1.80			
63 x 175	2.67	2.50	2.37	2.26	2.17	2.08	2.50	2.35	2.22	2.12	2.03	1.95	2.37	2.22	2.10	2.00	1.91	1.84
63 x 200	3.04	2.86	2.71	2.58	2.47	2.38	2.86	2.68	2.54	2.42	2.31	2.23	2.70	2.53	2.40	2.28	2.19	2.10
63 x 225	3.42	3.21	3.04	2.90	2.78	2.68	3.21	3.01	2.85	2.72	2.60	2.50	3.04	2.85	2.70	2.57	2.55	2.36
75 x 125	2.06	1.90	1.80				1.90						1.80					
75 x 150	2.43	2.28	2.16	2.06	1.98	1.91	2.28	2.14	2.03	1.93	1.85		2.16	2.03	1.92	1.83		
75 x 175	2.83	2.66	2.52	2.40	2.31	2.22	2.66	2.49	2.36	2.25	2.16	2.08	2.52	2.36	2.24	2.13	2.04	1.96
75 x 200	3.23	3.03	2.88	2.74	2.63	2.54	3.03	2.85	2.70	2.57	2.47	2.37	2.88	2.70	2.55	2.43	2.33	2.24
75 x 225	3.63	3.41	3.23	3.08	2.96	2.85	3.41	3.20	3.03	2.89	2.77	2.67	3.23	3.03	2.87	2.74	2.62	2.52
2 x 47 x 200	3.65	3.43	3.26	3.11	2.99	2.88	3.43	3.22	3.06	2.92	2.80	2.70	3.25	3.06	2.90	2.77	2.65	2.55
2 x 47 x 225	4.09	3.85	3.66	3.49	3.36	3.24	3.85	3.62	3.44	3.28	3.15	3.03	3.66	3.44	3.26	3.11	2.98	2.87
2 x 47 x 250	4.54	4.27	4.06	3.88	3.72	3.59	4.27	4.02	3.81	3.64	3.50	3.37	4.06	3.81	3.61	3.45	3.31	3.19
2 x 47 x 275	4.98	4.69	4.46	4.26	4.09	3.95	4.69	4.41	4.19	4.00	3.84	3.70	4.46	4.19	3.97	3.79	3.64	3.50
2 x 47 x 300	5.43	5.11	4.86	4.64	4.46	4.30	5.11	4.81	4.56	4.36	4.19	4.03	4.85	4.56	4.33	4.13	3.97	3.82

4. The section sizes are either BS4471 basic sawn sizes with the tolerances of BS4471 or CLS/ALS sizes with BS4471 tolerances.

5. No notches or holes shall be cut in purlins unless checked by a competent person.

6. The minimum bearing length at supports shall be 35 mm for rafters and 50 mm for purlins.

Table 2.18 Common or jack rafters for roofs having a pitch more than 30° but not more than 45° with access only for purposes of maintenance or repair. Imposed loading 1.00kN/m^2 (see paragraph 2.9)

Maximum clear span of rafter (m) Timber of strength class SC3 and SC4 (see Table 2.1)

	Dead Load [kN/m^2] excluding the self weight of the rafter								
	Not more than 0.50			More than 0.50 but not more than 0.75			More than 0.75 but not more than 1.00		
	Spacing of rafters (mm)								
Size of rafter (mm x mm)	400	450	600	400	450	600	400	450	600
SC3									
38 x 100	2.28	2.23	2.03	2.10	2.05	1.91	1.96	1.91	1.76
38 x 125	2.90	2.79	2.54	2.75	2.64	2.40	2.62	2.52	2.26
38 x 150	3.47	3.34	3.04	3.29	3.16	2.87	3.13	3.01	2.69
47 x 100	2.50	2.40	2.18	2.36	2.27	2.06	2.25	2.17	1.97
47 x 125	3.11	2.99	2.72	2.94	2.83	2.58	2.81	2.70	2.45
47 x 150	3.72	3.58	3.26	3.52	3.39	3.08	3.36	3.23	2.94
50 x 100	2.55	2.45	2.23	2.41	2.32	2.11	2.30	2.21	2.01
50 x 125	3.17	3.05	2.78	3.00	2.89	2.63	2.87	2.76	2.51
50 x 150	3.79	3.65	3.33	3.59	3.46	3.15	3.43	3.30	3.00
38 x 89	1.91	1.87	1.77	1.77	1.73	1.62	1.67	1.62	1.50
38 x 140	3.24	3.12	2.84	3.07	2.95	2.68	2.93	2.82	2.52
SC4									
38 x 100	2.42	2.33	2.12	2.29	2.20	2.00	2.18	2.10	1.90
38 x 125	3.02	2.90	2.64	2.86	2.75	2.50	2.72	2.62	2.38
38 x 150	3.61	3.47	3.16	3.42	3.29	2.99	3.26	3.14	2.85
47 x 100	2.60	2.50	2.27	2.46	2.36	2.15	2.34	2.25	2.05
47 x 125	3.23	3.11	2.83	3.06	2.95	2.68	2.92	2.81	2.55
47 x 150	3.86	3.72	3.39	3.66	3.52	3.21	3.49	3.36	3.06
50 x 100	2.65	2.55	2.32	2.51	2.41	2.19	2.39	2.30	2.09
50 x 125	3.30	3.17	2.89	3.12	3.01	2.73	2.98	2.87	2.61
50 x 150	3.94	3.79	3.46	3.73	3.60	3.27	3.57	3.43	3.12
38 x 89	2.16	2.08	1.89	2.04	1.96	1.78	1.95	1.87	1.70
38 x 140	3.37	3.25	2.95	3.19	3.07	2.79	3.05	2.93	2.66

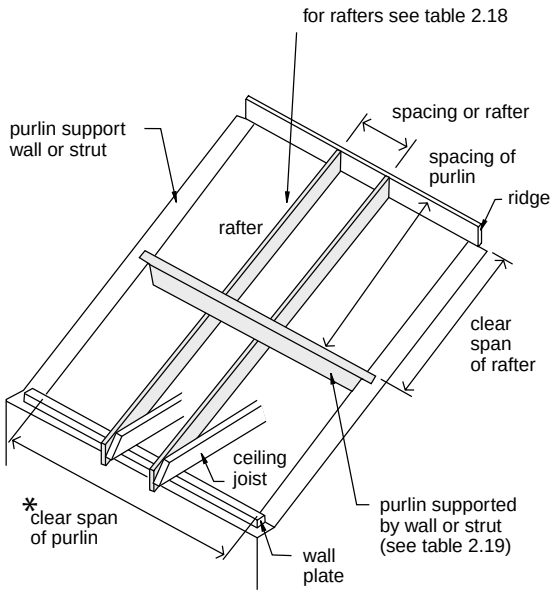

*take the clear span for the purlin as the clear dimension between supporting struts and/or walls

Notes to Tables 2.18 and 2.19

1. The sizes, spacings and spans given will support the dead loads stated in the table and imposed loads of 1.00kN/m^2, measured on plan or a concentrated load of 0.9 kN.

2. The tables are applicable to purlins installed perpendicular to the roof slope, whereby any horizontal thrust sustained by the rafters is restrained by the ceiling joists, or by other means.

3. When the spans of rafters or purlins are unequal the section sizes shall be determined for each span or by the longest span.

Table **2.19** Purlins supporting rafters to which Table 2.18 refers (Imposed loading 1.00kN/m^2)

Maximum clear span of purlin (m) Timber of strength class SC3 and SC4 (see Table 2.1)

	Dead Load [kN/m^2] excluding the self weight of the purlin																	
	Not more than 0.50						More than 0.50 but not more than 0.75						More than 0.75 but not more than 1.00					
	Spacing of purlins (mm)																	
Size of purlin (mm x mm)	1500	1800	2100	2400	2700	3000	1500	1800	2100	2400	2700	3000	1500	1800	2100	2400	2700	3000
47 x 150	1.87																	
47 x 175	2.17	2.04	1.92	1.83			2.05	1.92	1.81				1.95	1.82				
47 x 200	2.48	2.32	2.20	2.09	1.97	1.86	2.34	2.19	2.06	1.93	1.81		2.23	2.08	1.92			
47 x 225	2.79	2.61	2.47	2.34	2.20	2.08	2.64	2.46	2.31	2.15	2.03	1.92	2.51	2.33	2.15	2.01	1.89	
63 x 150	2.07	1.94	1.84				1.96	1.83					1.86					
63 x 175	2.41	2.26	2.14	2.04	1.95	1.88	2.28	2.14	2.02	1.92	1.84		2.17	2.03	1.92	1.83		
63 x 200	2.76	2.58	2.44	2.33	2.23	2.14	2.61	2.44	2.31	2.20	2.10	2.00	2.48	2.32	2.19	2.09	1.97	1.86
63 x 225	3.10	2.90	2.75	2.62	2.51	2.41	2.93	2.74	2.59	2.47	2.36	2.23	2.79	2.61	2.47	2.33	2.20	2.08
75 x 125	1.84																	
75 x 150	2.20	2.07	1.96	1.86			2.08	1.95	1.85				1.98	1.86				
75 x 175	2.57	2.41	2.28	2.17	2.08	2.00	2.43	2.28	2.15	2.05	1.96	1.89	2.31	2.17	2.05	1.95	1.87	
75 x 200	2.93	2.75	2.60	2.48	2.38	2.29	2.77	2.60	2.46	2.34	2.24	2.16	2.64	2.47	2.34	2.23	2.13	2.04
75 x 225	3.29	3.09	2.92	2.79	2.67	2.57	3.12	2.92	2.76	2.63	2.52	2.43	2.97	2.78	2.63	2.50	2.40	2.28
2 x 47 x 200	3.31	3.11	2.95	2.82	2.70	2.60	3.14	2.95	2.79	2.66	2.55	2.46	2.99	2.81	2.66	2.54	2.43	2.34
2 x 47 x 225	3.72	3.50	3.32	3.17	3.04	2.93	3.53	3.31	3.14	2.99	2.87	2.76	3.36	3.16	2.99	2.85	2.73	2.63
2 x 47 x 250	4.13	3.88	3.68	3.51	3.37	3.25	3.91	3.68	3.48	3.32	3.19	3.07	3.73	3.51	3.32	3.17	3.04	2.92
2 x 47 x 275	4.53	4.26	4.05	3.86	3.71	3.57	4.30	4.04	3.83	3.65	3.50	3.37	4.10	3.85	3.65	3.48	3.34	3.21
2 x 47 x 300	4.94	4.65	4.41	4.21	4.04	3.89	4.68	4.40	4.17	3.98	3.82	3.68	4.47	4.20	3.98	3.79	3.64	3.50
47 x 150	1.95	1.83					1.84											
47 x 175	2.27	2.13	2.01	1.92	1.83		2.15	2.01	1.90	1.80			2.04	1.91	1.80			
47 x 200	2.60	2.43	2.30	2.19	2.09	2.01	2.45	2.30	2.17	2.06	1.97	1.89	2.33	2.18	2.06	1.96	1.87	
47 x 225	2.92	2.73	2.58	2.46	2.35	2.26	2.76	2.58	2.44	2.32	2.22	2.13	2.62	2.45	2.32	2.20	2.10	1.89
63 x 125	1.81																	
63 x 150	2.16	2.03	1.92	1.83			2.05	1.92	1.81				195	1.83				
63 x 175	2.52	2.36	2.24	2.13	2.04	1.97	2.39	2.24	2.11	2.01	1.93	1.85	2.27	2.13	2.01	1.91	1.83	
63 x 200	2.88	2.70	2.56	2.44	2.33	2.24	2.72	2.55	2.41	2.30	2.20	2.12	2.59	2.43	2.30	2.19	2.09	2.01
63 x 225	3.23	3.03	2.87	2.74	2.62	2.52	3.06	2.87	2.71	2.59	2.48	2.38	2.92	2.73	2.58	2.46	2.35	2.26
75 x 125	1.92						1.82											
75 x 150	2.30	2.16	2.04	1.95	1.87		2.18	2.04	1.93	1.84			2.07	1.94	1.84			
75 x 175	2.68	2.51	2.38	2.27	2.18	2.10	2.54	2.38	2.25	2.15	2.06	1.98	2.42	2.27	2.14	2.04	1.96	1.88
75 x 200	3.06	2.87	2.72	2.59	2.49	2.39	2.89	2.72	2.57	2.45	2.35	2.26	2.76	2.59	2.45	2.33	2.23	2.15
75 x 225	3.43	3.22	3.06	2.91	2.79	2.69	3.25	3.05	2.89	2.75	2.64	2.54	3.10	2.91	2.75	2.62	2.51	2.41
2 x 47 x 200	3.46	3.25	3.08	2.94	2.82	2.72	3.28	3.08	2.92	2.78	2.67	2.57	3.13	2.94	2.78	2.65	2.54	2.45
2 x 47 x 225	3.88	3.65	3.46	3.31	3.17	3.06	3.68	3.46	3.28	3.13	3.00	2.89	3.51	3.30	3.13	2.98	2.86	2.75
2 x 47 x 250	4.30	4.05	3.84	3.67	3.52	3.40	4.08	3.84	3.64	3.47	3.33	3.21	3.90	3.66	3.47	3.31	3.18	3.06
2 x 47 x 275	4.73	4.45	4.22	4.03	3.87	3.73	4.48	4.22	4.00	3.82	3.66	3.53	4.28	4.02	3.81	3.64	3.49	3.36
2 x 47 x 300	5.15	4.82	4.60	4.39	4.22	4.07	4.89	4.59	4.36	4.16	3.99	3.85	4.67	4.38	4.16	3.97	3.80	3.66

SC3

SC4

4. The section sizes are either BS4471 basic sawn sizes with the tolerances of BS4471 or CLS/ALS sizes with BS4471 tolerances.

5. No notches or holes shall be cut in purlins unless checked by a competent person.

6. The minimum bearing length at supports shall be 35 mm for rafters and 50 mm for purlins.

Table 2.20 Joists for flat roofs with access only for purposes of maintenance or repair. Imposed loading 0.75kN/m^2 (see paragraph 2.9)

Maximum clear span of joist (m) Timber of strength class SC3 (see Table 2.1)

	Dead Load [kN/m^2] excluding the self weight of the joist								
	Not more than 0.50			More than 0.50 but not more than 0.75			More than 0.75 but not more than 1.00		
	Spacing of joists (mm)								
Size of joist (mm x mm)	400	450	600	400	450	600	400	450	600
38 x 97	1.74	1.72	1.67	1.67	1.64	1.58	1.61	1.58	1.51
38 x 122	2.37	2.34	2.25	2.25	2.21	2.11	2.16	2.11	2.01
38 x 147	3.02	2.97	2.85	2.85	2.80	2.66	2.72	2.66	2.51
38 x 170	3.63	3.57	3.37	3.41	3.34	3.17	3.24	3.17	2.98
38 x 195	4.30	4.23	3.86	4.03	3.94	3.63	3.81	3.72	3.45
38 x 220	4.94	4.76	4.34	4.64	4.49	4.09	4.38	4.27	3.88
47 x 97	1.92	1.90	1.84	1.84	1.81	1.74	1.77	1.74	1.65
47 x 122	2.60	2.57	2.47	2.47	2.43	2.31	2.36	2.31	2.19
47 x 147	3.30	3.25	3.12	3.12	3.06	2.90	2.96	2.90	2.74
47 x 170	3.96	3.89	3.61	3.72	3.64	3.40	3.53	3.44	3.23
47 x 195	4.68	4.53	4.13	4.37	4.28	3.89	4.14	4.04	3.70
47 x 220	5.28	5.09	4.65	4.99	4.81	4.38	4.75	4.58	4.17
50 x 97	1.97	1.95	1.89	1.89	1.86	1.78	1.81	1.78	1.70
50 x 122	2.67	2.64	2.53	2.53	2.49	2.37	2.42	2.37	2.25
50 x 147	3.39	3.34	3.19	3.19	3.13	2.97	3.04	2.97	2.80
50 x 170	4.06	3.99	3.69	3.81	3.73	3.47	3.61	3.53	3.30
50 x 195	4.79	4.62	4.22	4.48	4.36	3.97	4.23	4.13	3.78
50 x 220	5.38	5.19	4.74	5.09	4.90	4.47	4.85	4.67	4.25
63 x 97	2.19	2.16	2.09	2.09	2.06	1.97	2.04	1.97	1.87
63 x 122	2.95	2.91	2.79	2.79	2.74	2.61	2.66	2.61	2.47
63 x 147	3.72	3.66	3.44	3.50	3.43	3.25	3.33	3.26	3.07
63 x 170	4.44	4.35	3.97	4.16	4.07	3.74	3.95	3.85	3.56
63 x 195	5.14	4.96	4.54	4.86	4.69	4.28	4.61	4.47	4.07
63 x 220	5.77	5.57	5.10	5.46	5.27	4.82	5.21	5.02	4.59
75 x 122	3.17	3.12	3.00	3.00	2.94	2.80	2.86	2.80	2.65
75 x 147	3.98	3.92	3.64	3.75	3.67	3.44	3.56	3.48	3.27
75 x 170	4.74	4.58	4.19	4.44	4.33	3.96	4.21	4.11	3.77
75 x 195	5.42	5.23	4.79	5.13	4.95	4.53	4.89	4.72	4.31
75 x 220	6.07	5.87	5.38	5.76	5.56	5.09	5.50	5.30	4.85
38 x 140	2.84	2.79	2.68	2.68	2.63	2.51	2.56	2.51	2.37
38 x 184	4.01	3.94	3.64	3.76	3.68	3.43	3.56	3.48	3.25

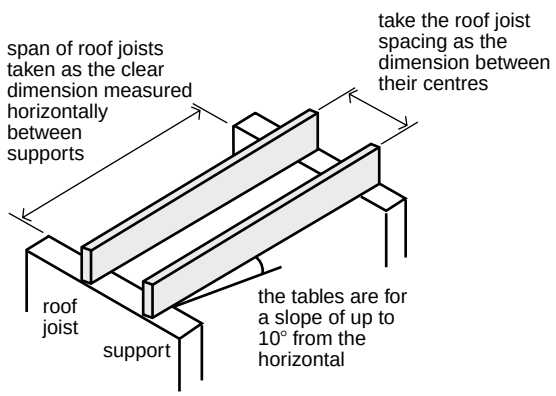

Notes

1. The sizes, spacings and spans given will support the dead loads stated in the table and imposed loads of 0.75kN/m^2, or a concentrated load of 0.9kN.
2. The section sizes are either regularised from BS4471 basic sawn sizes in accordance with the requirement sand tolerances of BS4471 or CLS/ALS sizes with BS4471 tolerances.
3. The minimum bearing length at supports for roof joists shall be 35 mm.
4. Notches and drilling of roof joists shall not exceed the limits given in paragraph 2.6.

Table 2.21 Joists for flat roofs with access only for purposes of maintenance or repair. Imposed loading 0.75kN/m^2 (see paragraph 2.9)

Maximum clear span of joist (m) Timber of strength class SC4 (see Table 2.1)

	Dead Load [kN/m^2] excluding the self weight of the joist								
	Not more than 0.50			More than 0.50 but not more than 0.75			More than 0.75 but not more than 1.00		
	Spacing of joists (mm)								
Size of joist (mm x mm)	400	450	600	400	450	600	400	450	600
38 x 97	1.84	1.82	1.76	1.76	1.73	1.66	1.69	1.66	1.59
38 x 122	2.50	2.46	2.37	2.37	2.33	2.22	2.27	2.22	2.11
38 x 147	3.18	3.13	3.00	3.00	2.94	2.79	2.85	2.79	2.64
38 x 170	3.81	3.75	3.50	3.58	3.51	3.30	3.40	3.32	3.12
38 x 195	4.51	4.40	4.01	4.22	4.13	3.78	3.99	3.90	3.59
38 x 220	5.13	4.95	4.51	4.85	4.67	4.25	4.59	4.44	4.04
47 x 97	2.03	2.00	1.94	1.94	1.91	1.83	1.86	1.83	1.74
47 x 122	2.74	2.70	2.60	2.60	2.55	2.43	2.48	2.43	2.30
47 x 147	3.47	3.42	3.26	3.27	3.21	3.04	3.11	3.04	2.87
47 x 170	4.15	4.08	3.76	.3.89	3.81	3.54	3.69	3.61	3.36
47 x 195	4.88	4.70	4.29	4.58	4.44	4.05	4.33	4.22	3.85
47 x 220	5.48	5.29	4.83	5.18	5.00	4.56	4.94	4.76	4.33
50 x 97	2.08	2.06	1.99	1.99	1.96	1.88	1.91	1.88	1.79
50 x 122	2.81	2.77	2.66	2.66	2.62	2.49	2.54	2.49	2.36
50 x 147	3.56	3.50	3.32	3.35	3.29	3.12	3.19	3.12	2.94
50 x 170	4.26	4.18	3.83	3.99	3.91	3.61	3.78	3.69	3.43
50 x 195	4.97	4.80	4.38	4.68	4.53	4.13	4.43	4.31	3.93
50 x 220	5.59	5.39	4.93	5.28	5.09	4.65	5.04	4.85	4.42
63 x 97	2.31	2.28	2.20	2.20	2.16	2.07	2.11	2.07	1.97
63 x 122	3.10	3.05	2.93	2.93	2.88	2.74	2.80	2.74	2.59
63 x 147	3.90	3.84	3.58	3.67	3.60	3.38	3.49	3.41	3.21
63 x 170	4.65	4.51	4.12	4.35	4.26	3.89	4.13	4.03	3.70
63 x 195	5.33	5.15	4.71	5.05	4.87	4.45	4.82	4.64	4.24
63 x 220	5.98	5.78	5.30	5.67	5.47	5.00	5.41	5.22	4.76
75 x 122	3.33	3.27	3.14	3.14	3.08	2.93	2.99	2.93	2.77
75 x 147	4.17	4.10	3.78	3.92	3.84	3.57	3.73	3.64	3.40
75 x 170	4.92	4.75	4.35	4.64	4.50	4.11	4.40	4.29	3.92
75 x 195	5.61	5.42	4.97	5.32	5.14	4.70	5.08	4.90	4.48
75 x 220	6.29	6.08	5.59	5.97	5.77	5.28	5.70	5.50	5.04
38 x 140	2.99	2.94	2.82	2.82	2.75	2.63	2.69	2.63	2.49
38 x 184	4.21	4.13	3.79	3.94	3.85	3.57	3.73	3.64	3.39

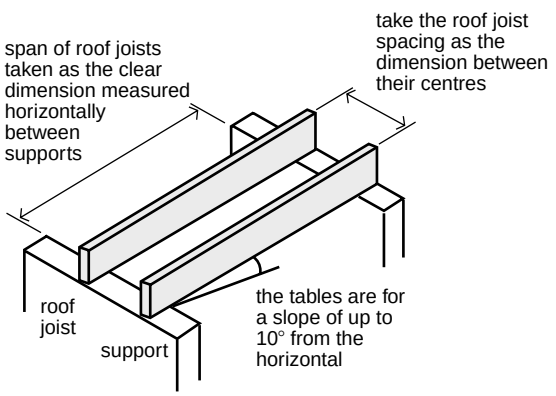

Notes

1. The sizes, spacings and spans given will support the dead loads stated in the table and imposed loads of 0.75kN/m^2, or a concentrated load of 0.9kN.
2. The section sizes are either regularised from BS4471 basic sawn sizes in accordance with the requirement sand tolerances of BS4471 or CLS/ALS sizes with BS4471 tolerances.
3. The minimum bearing length at supports for roof joists shall be 35 mm.
4. Notches and drilling of roof joists shall not exceed the limits given in paragraph 2.6.

Table 2.22 Joists for flat roofs with access only for purposes of maintenance or repair. Imposed loading 1.00kN/m^2 (see paragraph 2.9)

Maximum clear span of joist (m) Timber of strength class SC3 (see Table 2.1)

	Dead Load [kN/m^2] excluding the self weight of the joist								
	Not more than 0.50			More than 0.50 but not more than 0.75			More than 0.75 but not more than 1.00		
	Spacing of joists (mm)								
Size of joist (mm x mm)	400	450	600	400	450	600	400	450	600
38 x 97	1.74	1.72	1.67	1.67	1.64	1.58	1.61	1.58	1.51
38 x 122	2.37	2.34	2.25	2.25	2.21	2.11	2.16	2.11	2.01
38 x 147	3.02	2.97	2.75	2.85	2.80	2.61	2.72	2.66	2.49
38 x 170	3.62	3.49	3.17	3.41	3.31	3.01	3.24	3.17	2.88
38 x 195	4.15	3.99	3.63	3.94	3.79	3.45	3.77	3.63	3.29
38 x 220	4.67	4.49	4.09	4.44	4.27	3.88	4.25	4.09	3.71
47 x 97	1.92	1.90	1.84	1.84	1.81	1.74	1.77	1.74	1.65
47 x 122	2.60	2.57	2.45	2.47	2.43	2.31	2.36	2.31	2.19
47 x 147	3.00	3.24	2.95	3.12	3.06	2.80	2.96	2.90	2.68
47 x 170	3.88	3.74	3.40	3.69	3.56	3.23	3.53	3.40	3.09
47 x 195	4.44	4.27	3.89	4.23	4.07	3.70	4.05	3.89	3.54
47 x 220	4.99	4.81	4.38	4.75	4.58	4.17	4.55	4.38	3.99
50 x 97	1.97	1.95	1.89	1.89	1.86	1.78	1.81	1.78	1.70
50 x 122	2.67	2.64	2.50	2.53	2.49	2.37	2.42	2.37	2.25
50 x 147	3.39	3.31	3.01	3.19	3.13	2.86	3.04	2.97	2.73
50 x 170	3.96	3.81	3.47	3.77	3.63	3.30	3.61	3.47	3.16
50 x 195	4.53	4.36	3.97	4.31	4.15	3.78	4.13	3.97	3.61
50 x 220	5.09	4.90	4.47	4.85	4.67	4.25	4.65	4.47	4.07
63 x 97	2.19	2.16	2.09	2.09	2.06	1.97	2.01	1.97	1.87
63 x 122	2.95	2.91	2.70	2.79	2.74	2.57	2.66	2.61	2.46
63 x 147	3.70	3.56	3.25	3.50	3.39	3.09	3.33	3.25	2.95
63 x 170	4.26	4.10	3.74	4.06	3.91	3.56	3.89	3.74	3.41
63 x 195	4.86	4.69	4.28	4.64	4.47	4.07	4.45	4.28	3.90
63 x 220	5.46	5.27	4.82	5.21	5.02	4.59	5.00	4.82	4.39
75 x 122	3.17	3.12	2.86	3.00	2.94	2.72	2.86	2.80	2.60
75 x 147	3.90	3.76	3.44	3.72	3.59	3.27	3.56	3.44	3.13
75 x 170	4.49	4.33	3.96	4.29	4.13	3.77	4.11	3.96	3.61
75 x 195	5.13	4.95	4.53	4.89	4.72	4.31	4.70	4.53	4.13
75 x 220	5.76	5.56	5.09	5.50	5.30	4.85	5.28	5.09	4.65
38 x 140	2.84	2.79	2.62	2.68	2.63	2.48	2.56	2.51	2.37
38 x 184	3.92	3.77	3.43	3.73	3.58	3.25	3.56	3.43	3.11

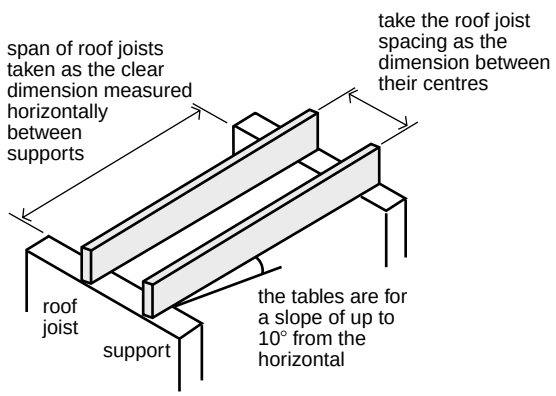

Notes

1. The sizes, spacings and spans given will support the dead loads stated in the table and imposed loads of 1.0kN/m^2, or a concentrated load of 0.9kN.
2. The section sizes are either regularised from BS4471 basic sawn sizes in accordance with the requirements and tolerances of BS4471 o CLS/ALS sizes with BS4471 tolerances.
3. The minimum bearing length at supports for roof joists shall be 35 mm.
4. Notches and drilling of roof joists shall not exceed the limits given in paragraph 2.6.

Table 2.23 Joists for flat roofs with access only for purposes of maintenance or repair. Imposed loading 1.00kN/m^2 (see paragraph 2.9)

Maximum clear span of joist (m) Timber of strength class SC4 (see Table 2.1)

	Dead Load [kN/m^2] excluding the self weight of the joist								
	Not more than 0.50			More than 0.50 but not more than 0.75			More than 0.75 but not more than 1.00		
	Spacing of joists (mm)								
Size of joist (mm x mm)	400	450	600	400	450	600	400	450	600
38 x 97	1.84	1.82	1.76	1.76	1.73	1.66	1.69	1.66	1.59
38 x 122	2.50	2.46	2.37	2.37	2.33	2.22	2.27	2.22	2.11
38 x 147	3.18	3.13	2.86	3.00	2.94	2.71	2.85	2.79	2.59
38 x 170	3.77	3.63	3.30	3.58	3.45	3.13	3.40	3.30	2.99
38 x 195	4.31	4.15	3.78	4.10	3.95	3.59	3.93	3.78	3.43
38 x 220	4.85	4.67	4.25	4.61	4.44	4.04	4.42	4.25	3.86
47 x 97	2.03	2.00	1.94	1.94	1.91	1.83	1.86	1.83	1.74
47 x 122	2.74	2.70	2.55	2.60	2.55	2.42	2.48	2.43	2.30
47 x 147	3.47	3.37	3.07	3.27	3.21	2.91	3.11	3.04	2.79
47 x 170	4.03	3.88	3.54	3.84	3.70	3.36	3.68	3.54	3.22
47 x 195	4.61	4.44	4.05	4.39	4.23	3.85	4.21	4.05	3.68
47 x 220	5.18	5.00	4.56	4.94	4.76	4.33	4.73	4.56	4.15
50 x 97	2.08	2.06	1.99	1.99	1.96	1.88	1.91	1.88	1.79
50 x 122	2.81	2.77	2.60	2.66	2.62	2.47	2.54	2.49	2.36
50 x 147	3.56	3.44	3.13	3.35	3.27	2.97	3.19	3.12	2.85
50 x 170	4.11	3.96	3.61	3.92	3.77	3.43	3.75	3.61	3.28
50 x 195	4.70	4.53	4.13	4.48	4.31	3.93	4.29	4.13	3.76
50 x 220	5.28	5.09	4.65	5.04	4.85	4.42	4.83	4.65	4.23
63 x 97	2.31	2.28	2.20	2.20	2.16	2.07	2.11	2.07	1.97
63 x 122	3.10	3.05	2.81	2.93	2.88	2.67	2.80	2.74	2.56
63 x 147	3.84	3.70	3.38	3.66	3.52	3.21	3.49	3.38	3.07
63 x 170	4.42	4.26	3.89	4.21	4.06	3.70	4.04	3.89	3.54
63 x 195	5.05	4.87	4.45	4.81	4.64	4.24	4.62	4.45	4.06
63 x 220	5.67	5.47	5.00	5.41	5.22	4.76	5.19	5.00	4.56
75 x 122	3.33	3.26	2.97	3.14	3.08	2.83	2.99	2.93	2.71
75 x 147	4.05	3.91	3.57	3.86	3.72	3.40	3.71	3.57	3.25
75 x 170	4.66	4.50	4.11	4.45	4.29	3.92	4.27	4.11	3.75
75 x 195	5.32	5.14	4.70	5.08	4.90	4.48	4.88	4.70	4.29
75 x 220	5.97	5.77	5.28	5.70	5.50	5.04	5.48	5.28	4.83
38 x 140	2.99	2.94	2.72	2.82	2.77	2.59	2.69	2.63	2.47
38 x 184	4.07	3.92	3.57	3.87	3.73	3.39	3.71	3.57	3.24

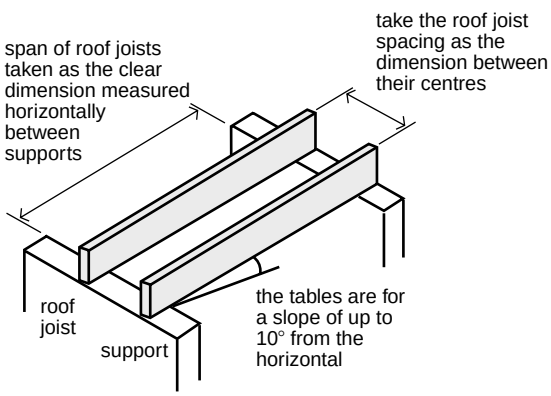

Notes

1. The sizes, spacings and spans given will support the dead loads stated in the table and imposed loads of 1.0kN/m^2, or a concentrated load of 0.9kN.
2. The section sizes are either regularised from BS4471 basic sawn size in accordance with the requirements and tolerances of BS4471 or CLS/ALS sizes with BS4471 tolerances.
3. The minimum bearing length at supports for roof joists shall be 35 mm.
4. Notches and drilling of roof joists shall not exceed the limits given in paragraph 2.6.

Table 2.24 Joists for flat roofs with access not limited to the purposes of maintenance or repair. Imposed loading 1.50kN/m^2

Maximum clear span of joist (m) Timber of strength class SC3 (see Table 2.1)

	Dead Load [kN/m^2] excluding the self weight of the joist								
	Not more than 0.50			More than 0.50 but not more than 0.75			More than 0.75 but not more than 1.00		
	Spacing of joists (mm)								
Size of joist (mm x mm)	400	450	600	400	450	600	400	450	600
38 x 122	1.80	1.79	1.74	1.74	1.71	1.65	1.68	1.65	1.57
38 x 147	2.35	2.33	2.27	2.27	2.25	2.18	2.21	2.18	2.09
38 x 170	2.88	2.85	2.77	2.77	2.74	2.64	2.68	2.64	2.53
38 x 195	3.47	3.43	3.29	3.33	3.28	3.16	3.21	3.16	3.02
38 x 220	4.08	4.03	3.71	3.90	3.84	3.56	3.75	3.68	3.43
47 x 122	2.00	1.99	1.94	1.94	1.93	1.87	1.89	1.87	1.81
47 x 147	2.60	2.58	2.51	2.51	2.48	2.40	2.44	2.40	2.31
47 x 170	3.18	3.14	3.06	3.06	3.02	2.91	2.95	2.91	2.78
47 x 195	3.82	3.78	3.54	3.66	3.61	3.40	3.52	3.46	3.28
47 x 220	4.48	4.38	3.99	4.27	4.20	3.83	4.10	4.03	3.70
50 x 122	2.06	2.05	2.00	2.00	1.98	1.93	1.95	1.93	1.86
50 x 147	2.68	2.65	2.59	2.59	2.56	2.47	2.51	2.47	2.38
50 x 170	3.27	3.23	3.14	3.14	3.10	2.99	3.04	2.99	2.86
50 x 195	3.93	3.88	3.61	3.76	3.70	3.47	3.62	3.56	3.35
50 x 220	4.60	4.47	4.07	4.38	4.30	3.91	4.21	4.13	3.78
63 x 97	1.67	1.66	1.63	1.63	1.61	1.57	1.59	1.57	1.53
63 x 122	2.31	2.29	2.24	2.24	2.21	2.15	2.17	2.15	2.07
63 x 147	2.98	2.95	2.87	2.87	2.84	2.74	2.78	2.74	2.63
63 x 170	3.62	3.59	3.41	3.48	3.43	3.28	3.36	3.30	3.16
63 x 195	4.34	4.29	3.90	4.15	4.08	3.75	3.99	3.92	3.62
63 x 220	5.00	4.82	4.39	4.82	4.64	4.22	4.62	4.48	4.08
75 x 122	2.50	2.48	2.42	2.42	2.40	2.32	2.35	2.32	2.24
75 x 147	3.23	3.19	3.11	3.11	3.07	2.96	3.00	2.96	2.84
75 x 170	3.91	3.87	3.61	3.75	3.69	3.47	3.61	3.55	3.35
75 x 195	4.66	4.53	4.13	4.45	4.36	3.97	4.28	4.20	3.84
75 x 220	5.28	5.09	4.65	5.09	4.90	4.47	4.92	4.74	4.32
38 x 140	2.19	2.17	2.12	2.12	2.10	2.04	2.07	2.04	1.94
38 x 184	3.21	3.17	3.08	3.08	3.04	2.93	2.98	2.93	2.80

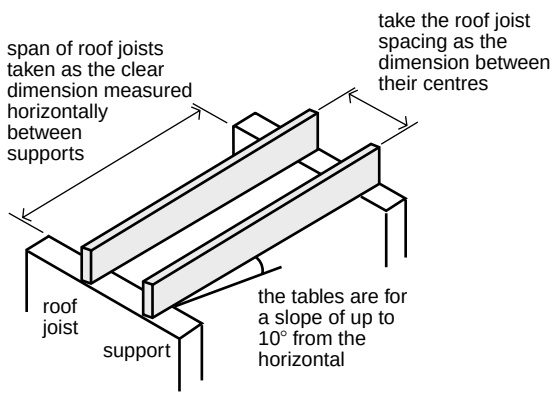

Notes

1. The sizes, spacings and spans given will support the dead loads stated in the table and imposed loads of 1.50kN/m^2, or a concentrated load of 0.9kN.
2. The section sizes are either regularised from BS4471 basic sawn size in accordance with the requirements and tolerances of BS4471 or CLS/ALS sizes with BS4471 tolerances.
3. The minimum bearing length at supports for roof joists shall be 35 mm.
4. Notches and drilling of roof joists shall not exceed the limits given in paragraph 2.6.

Table 2.25 Joists for flat roofs with access not limited to purposes of maintenance or repair. Imposed loading 1.50kN/m^2

Maximum clear span of joist (m) Timber of strength class SC4 (see Table 2.1)

	Dead Load [kN/m^2] excluding the self weight of the joist								
	Not more than 0.50			More than 0.50 but not more than 0.75			More than 0.75 but not more than 1.00		
	Spacing of joists (mm)								
Size of joist (mm x mm)	400	450	600	400	450	600	400	450	600
38 x 122	1.91	1.90	1.86	1.86	1.84	1.79	1.81	1.79	1.73
38 x 147	2.49	2.46	2.40	2.40	2.38	2.30	2.33	2.30	2.21
38 x 170	3.04	3.01	2.93	2.93	2.89	2.79	2.83	2.79	2.67
38 x 195	3.66	3.62	3.43	3.51	3.46	3.29	3.38	3.33	3.18
38 x 220	4.30	4.25	3.86	4.10	4.01	3.71	3.94	3.87	3.58
47 x 122	2.12	2.10	2.06	2.06	2.04	1.98	2.00	1.98	1.91
47 x 147	2.75	2.73	2.66	2.66	2.62	2.54	2.57	2.54	2.44
47 x 170	3.35	3.32	3.22	3.22	3.18	3.06	3.11	3.06	2.93
47 x 195	4.03	3.98	3.68	3.85	3.80	3.54	3.71	3.64	3.42
47 x 220	4.71	4.56	4.15	4.49	4.39	3.99	4.31	4.23	3.85
50 x 122	2.19	2.17	2.12	2.12	2.10	2.04	2.06	2.04	1.97
50 x 147	2.83	2.81	2.73	2.73	2.70	2.61	2.65	2.61	2.51
50 x 170	3.45	3.41	3.28	3.31	3.27	3.15	3.20	3.15	3.01
50 x 195	4.14	4.09	3.76	3.96	3.90	3.61	3.81	3.74	3.49
50 x 220	4.83	4.65	4.23	4.61	4.47	4.07	4.42	4.32	3.93
63 x 97	1.77	1.75	1.72	1.72	1.71	1.66	1.68	1.66	1.61
63 x 122	2.44	2.42	2.36	2.36	2.34	2.27	2.30	2.27	2.18
63 x 147	3.15	3.12	3.03	3.03	2.99	2.89	2.93	2.89	2.77
63 x 170	3.82	3.78	3.54	3.66	3.61	3.41	3.53	3.47	3.29
63 x 195	4.56	4.45	4.06	4.36	4.29	3.90	4.19	4.11	3.77
63 x 220	5.19	5.00	4.56	5.00	4.82	4.39	4.84	4.66	4.24
75 x 122	2.64	2.62	2.56	2.56	2.53	2.45	2.48	2.45	2.36
75 x 147	3.40	3.36	3.25	3.27	3.23	3.11	3.16	3.11	2.98
75 x 170	4.11	4.07	3.75	3.94	3.88	3.61	3.79	3.73	3.49
75 x 195	4.79	4.70	4.29	4.67	4.53	4.13	4.49	4.38	3.99
75 x 220	5.48	5.28	4.83	5.28	5.09	4.65	5.11	4.93	4.49
38 x 140	2.32	2.30	2.25	2.25	2.22	2.16	2.19	2.16	2.08
38 x 184	3.39	3.35	3.24	3.25	3.21	3.09	3.14	3.09	2.95

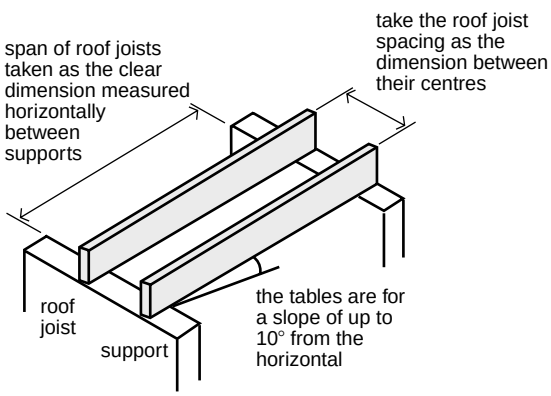

Notes

1. The sizes, spacings and spans given will support the dead loads stated in the table and imposed loads of 1.50kN/m^2, or a concentrated load of 0.9kN.
2. The section sizes are either regularised from BS4471 basic sawn sizes in accordance with the requirements and tolerances of BS4471 or CLS/ALS sizes with BS4471 tolerances.
3. The minimum bearing length at supports for roof joists shall be 35 mm.
4. Notches and drilling of roof joists shall not exceed the limits given in paragraph 2.6.

Table 2.26 Purlins supporting sheeting or decking for roofs having a pitch more than 10° but not more than 35°. Imposed loading 0.75kN/m^2

Maximum clear span of purlin (m) Timber of strength class SC3 and SC4 (see Table 2.1)

	Dead Load [kN/m^2] excluding the self weight of the purlin																	
	Not more than 0.25						More than 0.25 but not more than 0.50						More than 0.50 but not more than 0.75					
	Spacing of purlins (mm)																	
Size of purlin (mm x mm)	900	1200	1500	1800	2100	2400	900	1200	1500	1800	2100	2400	900	1200	1500	1800	2100	2400
50 x 100	1.68	1.63	1.51	1.42	1.34	1.28	1.55	1.48	1.40	1.31	1.24	1.18	1.45	1.37	1.31	1.22	1.16	1.10
50 x 125	2.24	2.03	1.88	1.77	1.67	1.60	2.06	1.88	1.74	1.63	1.54	1.47	1.91	1.77	1.63	1.53	1.44	1.37
50 x 150	2.68	2.44	2.26	2.12	2.01	1.91	2.49	2.26	2.09	1.96	1.85	1.76	2.34	2.12	1.96	1.83	1.73	1.65
50 x 175	3.12	2.84	2.63	2.47	2.34	2.23	2.90	2.63	2.43	2.28	2.16	2.06	2.72	2.47	2.28	2.13	2.02	1.92
50 x 200	3.56	3.24	3.00	2.82	2.67	2.55	3.31	3.00	2.78	2.60	2.46	2.35	3.11	2.81	2.60	2.44	2.30	2.19
50 x 225	4.00	3.63	3.37	3.17	3.00	2.86	3.71	3.37	3.12	2.93	2.77	2.64	3.49	3.16	2.92	2.74	2.59	2.47
63 x 100	1.87	1.77	1.64	1.54	1.46	1.39	1.72	1.64	1.51	1.42	1.34	1.28	1.60	1.52	1.42	1.33	1.26	1.20
63 x 125	2.42	2.20	2.04	1.92	1.82	1.73	2.25	2.04	1.89	1.77	1.68	1.60	2.10	1.91	1.77	1.66	1.57	1.50
63 x 150	2.90	2.63	2.44	2.30	2.18	2.08	2.69	2.44	2.26	2.12	2.01	1.92	2.53	2.29	2.12	2.00	1.88	1.79
63 x 175	3.37	3.07	2.85	2.67	2.54	2.42	3.13	2.84	2.63	2.47	2.34	2.23	2.94	2.67	2.47	2.32	2.19	2.09
63 x 200	3.84	3.50	3.25	3.05	2.89	2.76	3.57	3.24	3.01	2.82	2.67	2.55	3.36	3.05	2.82	2.65	2.51	2.39
63 x 225	4.31	3.92	3.64	3.43	3.25	3.10	4.01	3.64	3.38	3.17	3.01	2.87	3.77	3.42	3.17	2.97	2.82	2.68
50 x 100	1.79	1.71	1.58	1.48	1.40	1.34	1.64	1.57	1.46	1.37	1.30	1.23	1.53	1.45	1.37	1.28	1.21	1.15
50 x 125	2.34	2.13	1.97	1.85	1.75	1.67	2.17	1.97	1.82	1.71	1.62	1.54	2.02	1.85	1.71	1.60	1.51	1.44
50 x 150	2.80	2.55	2.36	2.22	2.10	2.00	2.60	2.36	2.18	2.05	1.94	1.85	2.44	2.21	2.05	1.92	1.81	1.73
50 x 175	3.26	2.97	2.75	2.58	2.45	2.34	3.03	2.75	2.54	2.39	2.26	2.15	2.85	2.58	2.39	2.24	2.12	2.01
50 x 200	3.72	3.38	3.14	2.95	2.79	2.67	3.45	3.13	2.90	2.73	2.58	2.46	3.25	2.94	2.72	2.55	2.42	2.30
50 x 225	4.17	3.80	3.52	3.31	3.14	3.00	3.88	3.52	3.26	3.06	2.90	2.77	3.65	3.31	3.06	2.87	2.72	2.59
63 x 100	1.99	1.84	1.71	1.61	1.52	1.45	1.81	1.71	1.58	1.49	1.41	1.34	1.69	1.60	1.48	1.39	1.32	1.26
63 x 125	2.53	2.30	2.13	2.00	1.90	1.81	2.35	2.13	1.97	1.85	1.76	1.68	2.21	2.00	1.85	1.74	1.65	1.57
63 x 150	3.02	2.75	2.55	2.40	2.28	2.17	2.81	2.55	2.37	2.22	2.10	2.01	2.64	2.40	2.22	2.08	1.97	1.88
63 x 175	3.52	3.20	2.97	2.80	2.65	2.53	3.27	2.97	2.76	2.59	2.45	2.34	3.08	2.79	2.59	2.43	2.30	2.19
63 x 200	4.01	3.65	3.39	3.19	3.03	2.89	3.73	3.39	3.14	2.95	2.80	2.67	3.51	3.19	2.95	2.77	2.62	2.50
63 x 225	4.49	4.10	3.81	3.58	3.40	3.25	4.18	3.80	3.53	3.32	3.15	3.00	3.94	3.58	3.32	3.11	2.95	2.81

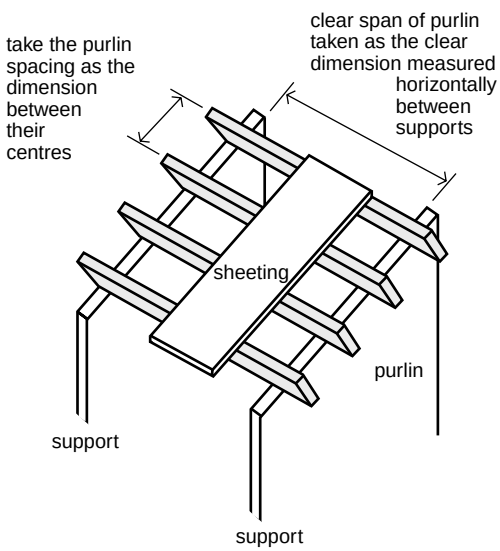

Notes

1. The sizes, spacings and spans given will support the dead loads stated in the table and imposed loads of 0.75kN/m^2, measured on plan or a concentrated load of 0.9kN.
2. The section sizes are either BS4471 basic sawn sizes with the tolerances of BS4471 or CLS/ALS sizes with BS4471 tolerances.
3. The minimum bearing length at supports for purlins shall be 50 mm.
4. No notches or holes shall be cut in purlins unless checked by a competent person.

Table 2.27 Purlins supporting sheeting or decking for roofs having a pitch more than 10° but not more than 35°. Imposed loading 1.00kN/m^2

Maximum clear span of purlin (m) Timber of strength class SC3 and SC4 (see Table 2.1)

	Dead Load [kN/m^2] excluding the self weight of the purlin																	
	Not more than 0.25						More than 0.25 but not more than 0.50						More than 0.50 but not more than 0.75					
	Spacing of purlins (mm)																	
Size of purlin (mm x mm)	900	1200	1500	1800	2100	2400	900	1200	1500	1800	2100	2400	900	1200	1500	1800	2100	2400
50 x 100	1.67	1.51	1.40	1.31	1.24	1.18	1.55	1.42	1.31	1.22	1.16	1.10	1.45	1.34	1.24	1.16	1.09	1.04
50 x 125	2.08	1.88	1.74	1.64	1.55	1.47	1.95	1.77	1.63	1.53	1.45	1.38	1.85	1.67	1.54	1.44	1.36	1.30
50 x 150	2.49	2.26	2.09	1.96	1.85	1.77	2.34	2.12	1.96	1.83	1.86	1.65	2.22	2.00	1.85	1.73	1.64	1.56
50 x 175	2.90	2.63	2.43	2.28	2.16	2.06	2.73	2.47	2.28	2.14	2.02	1.92	2.58	2.34	2.16	2.02	1.91	1.81
50 x 200	3.31	3.00	2.78	2.61	2.47	2.35	3.11	2.82	2.60	2.44	2.31	2.20	2.95	2.67	2.46	2.31	2.18	2.07
50 x 225	3.72	3.37	3.12	2.93	2.77	2.64	3.49	3.16	2.93	2.74	2.59	2.47	3.31	3.00	2.77	2.59	2.45	2.31
63 x 100	1.80	1.64	1.51	1.42	1.35	1.28	1.69	1.54	1.42	1.33	1.26	1.20.	1.60	1.45	1.34	1.26	1.19	1.13
63 x 125	2.25	2.04	1.89	1.77	1.68	1.60	2.11	1.92	1.77	1.66	1.57	1.50	2.00	1.81	1.68	1.57	1.49	1.41
63 x 150	2.69	2.44	2.26	2.13	2.01	1.92	2.53	2.29	2.12	1.99	1.88	1.80	2.40	2.17	2.01	1.88	1.78	1.70
63 x 175	3.13	2.85	2.64	2.48	2.35	2.24	2.95	2.67	2.47	2.32	2.20	2.09	2.80	2.53	2.34	2.20	2.08	1.98
63 x 200	3.57	3.25	3.01	2.83	2.68	2.55	3.36	3.05	2.82	2.65	2.51	2.39	3.19	2.89	2.67	2.51	2.37	2.26
63 x 225	4.01	3.65	3.38	3.18	3.01	2.87	3.77	3.43	3.17	2.98	2.82	2.69	3.58	3.25	3.01	2.82	2.67	2.54
50 x 100	1.74	1.58	1.46	1.37	1.30	1.24	1.64	1.48	1.37	1.28	1.21	1.16	1.53	1.40	1.30	1.21	1.15	1.09
50 x 125	2.17	1.97	1.82	1.71	1.62	1.54	2.04	1.85	1.71	1.60	1.52	1.44	1.94	1.75	1.62	1.51	1.43	1.36
50 x 150	2.60	2.36	2.19	2.05	1.94	1.85	2.45	2.22	2.05	1.92	1.82	1.73	2.32	2.10	1.94	1.82	1.72	1.63
50 x 175	3.03	2.75	2.55	2.39	2.26	2.16	2.85	2.58	2.39	2.24	2.12	2.02	2.70	2.45	2.26	2.12	2.00	1.90
50 x 200	3.46	3.14	2.91	2.73	2.58	2.46	3.25	2.95	2.73	2.56	2.42	2.30	3.08	2.79	2.58	2.42	2.28	2.17
50 x 225	3.88	3.52	3.27	3.07	2.90	2.77	3.65	3.31	3.06	2.87	2.72	2.59	3.46	3.14	2.90	2.72	2.57	2.44
63 x 100	1.89	1.71	1.58	1.49	1.41	1.34	1.77	1.61	1.49	1.39	1.32	1.26	1.68	1.52	1.41	1.32	1.25	1.19
63 x 125	2.35	2.13	1.98	1.86	1.76	1.68	2.21	2.00	1.85	1.74	1.65	1.57	2.10	1.90	1.76	1.65	1.56	1.48
63 x 150	2.81	2.55	2.37	2.22	2.11	2.01	2.65	2.40	2.22	2.08	1.97	1.88	2.51	2.27	2.10	1.97	1.87	1.78
63 x 175	3.27	2.97	2.76	2.59	2.46	2.34	3.08	2.79	2.59	2.43	2.30	2.19	2.92	2.65	2.46	2.30	2.18	2.07
63 x 200	3.73	3.39	3.15	2.96	2.80	2.67	3.51	3.19	2.95	2.77	2.63	2.50	3.33	3.02	2.80	2.63	2.48	2.37
63 x 225	4.18	3.81	3.53	3.32	3.15	3.01	3.94	3.58	3.32	3.12	2.95	2.81	3.74	3.30	3.15	2.95	2.79	2.66

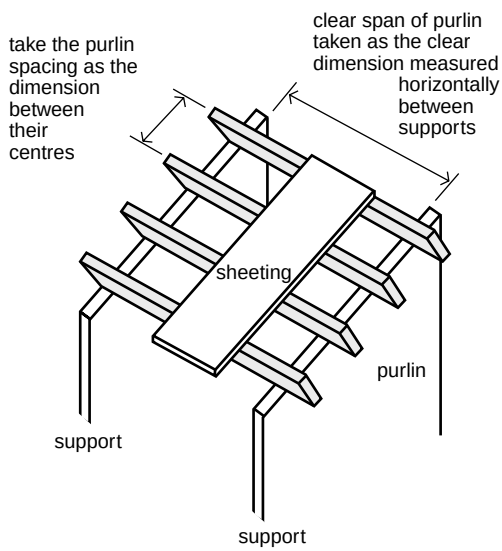

Notes

1. The sizes, spacings and spans given will support the dead loads stated in the table and imposed loads of 1.0kN/m^2, measured on plan or a concentrated load of 0.9kN.
2. The section sizes are either BS4471 basic sawn sizes with the tolerances of BS4471 or CLS/ALS sizes with BS4471 tolerances.
3. The minimum bearing length at supports for purlins shall be 50 mm.
4. No notches or holes shall be cut in purlins unless checked by a competent person.

SECTION 3 – Thickness of walls in certain small buildings

Application

3.1 This Section applies to the following building types–

(a) residential buildings of note more than three storeys;

(b) small single storey non-residential buildings; and

(c) small buildings forming annexes to residential buildings (including garages and outbuildings).

Wall types

3.2 Only the types of wall given in Table 3.1 which must extend to the full storey height, and parapet walls are considered in this Section.

Table **3.1** **Wall types considered in this Section**

Residential buildings of up three storeys
external walls internal loadbearing walls compartment walls separating walls
Small single storey non-residential buildings and annexes
external walls internal loadbearing walls

The use of this Section

3.3 When using this Section it should be noted that –

(a) the stability requirements in paragraph 1.3 shall be complied with;

(b) if wall thickness is to be determined according to paragraphs 3.4 to 3.13, all appropriate design conditions given in this Section must be satisfied;

(c) walls shall comply with the relevant requirements of BS 5628: Part 3: 1985, except as regards the conditions given in paragraphs 3.14 to 3.39;

(d) in formulating this Section the worst combination of circumstances likely to arise was taken into account. If a requirement of this Section is considered too onerous in a particular case, it may be appropriate to consider a minor departure on the basis of judgement and experience, or to show adequacy by calculation in respect of the aspect of the wall which is subject to the departure rather than for the entire wall; and

(e) the unit compressive strengths of bricks and blocks shall be–

(i) bricks – 5, 7 and 15N/mm^2;

(ii) blocks – 2.8 and 7N/mm^2,

depending on circumstances (see Diagram 3.9).

BS 5628: Part 1: 1991 gives design strengths for walls where the suitability for use of masonry units of other compressive strengths is being considered.

Thickness of walls

3.4 General – Wall thickness may be determined according to this Section, provided–

(a) conditions relating to the building of which the wall forms a part (see paragraphs 3.14 to 3.17); and

(b) conditions relating to the wall (see paragraphs 3.18 to 3.39),

are met (see Diagram 3.1 opposite).

3.5 Exceptions – Walls forming part of a bay window – This Section does not apply to any portion of an external wall which is constructed as a bay for, or as a gable over, a bay window above ground floor cill level (indicated as X in Diagram 3.2).

Diagram **3.2** **Exclusion of wall containing a bay**

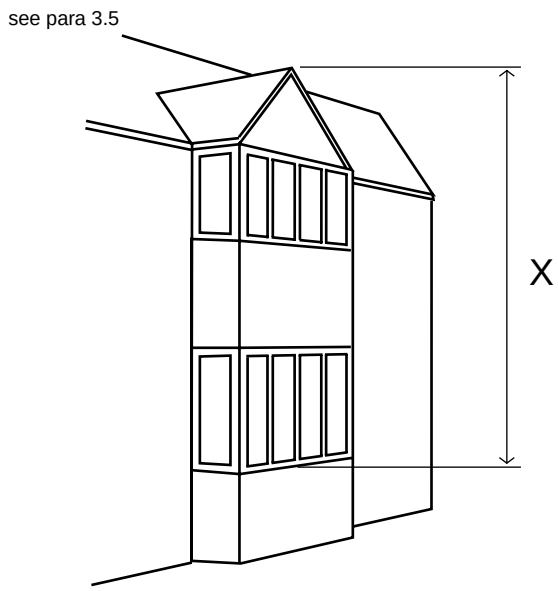

Diagram **3.1** **Determination of wall thicknesses**

see para 3.5

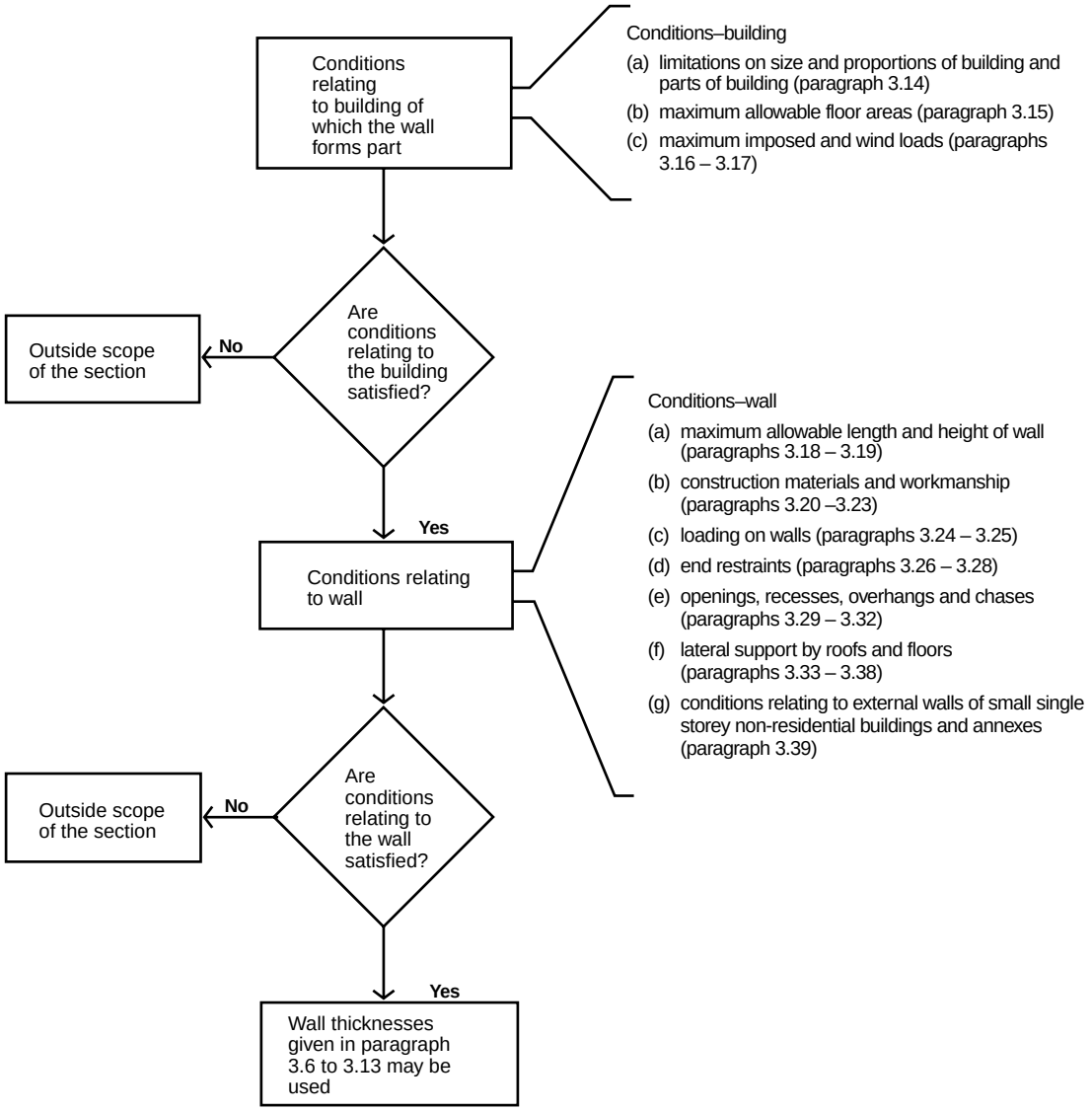

Table **3.2** **Minimum thickness of certain external walls, compartment walls and separating walls**

Height of wall	Length of wall	Minimum thickness of wall
not exceeding 3.5 m	not exceeding 12 m	190 mm for the whole of its height
exceeding 3.5 m but not exceeding 9 m	not exceeding 9 m	190 mm for the whole of its height
	exceeding 9 m but not exceeding 12 m	290 mm from the base for the height of one storey, and 190 mm for the rest of its height
exceeding 9 m but not exceeding 12 m	not exceeding 9 m	290 mm from the base for the height of one storey, and 190mm for the rest of its height
	exceeding 9 m but not exceeding 12 m	290 mm from the base for the height of two storeys, and 190 mm for the rest of its height

3.6 Solid external, compartment and separating walls in coursed brickwork or blockwork – Solid walls constructed of coursed brickwork or blockwork shall be at least as thick as 1/16 of the storey height. Further requirements are given in Table 3.2.

3.7 Solid external, compartment and separating walls of uncoursed stone, flints, etc – The thickness of walls constructed in uncoursed stone, flints or other burnt or vitrified material shall not be less than 1.33 times the thickness required by paragraph 3.6.

3.8 Cavity walls in coursed brickwork and blockwork – All cavity walls shall have leaves at least 90 mm thick and cavities at least 50 mm wide. For maximum width of cavity and spacing of cavity wall ties refer to Table 3.3. Refer to paragraph 3.20 for specification for wall ties.

For external , compartment and separating walls in cavity construction, the combined thickness of the 2 leaves plus 10 mm shall not be less than the thickness required by paragraph 3.6 for a solid wall of the same height and length.

3.9 Walls providing vertical support to other walls – Irrespective of the materials used in the construction, a wall shall not be less in thickness than any part of the wall to which it gives vertical support.

3.10 Internal loadbearing walls in brickwork or blockwork (except compartment walls or separating walls) – Internal loadbearing walls shall have a thickness not less than:

$$\frac{\text{(specified thickness from Table 3.2)}}{2} - 5\text{mm}$$

except for a wall in the lowest storey of a 3-storey building, carrying load from both upper storeys, which shall have a thickness as determined by the above equation or 140 mm, whichever is the greater.

3.11 Parapet Walls – The minimum thickness and maximum height of parapet walls shall be as given in Table 3.4.

Table **3.3** **Maximum spacing of cavity wall ties**

Width of cavity (mm)	Horizontal spacing (mm)	Vertical spacing (mm)	Other Comments
50-75	900	450	See notes 1 and 2
76-100	750	450	See notes 1, 2 and 3

Notes

1 The horizontal and vertical spacing of wall ties may be varied if necessary and to suit the construction provided that the number of ties per unit area is maintained.

2 Wall ties spaced note more than 300 mm apart vertically shall be provided within 225 mm from the sides of all opening s with unbonded jambs.

3 Vertical twist type ties, or ties of equivalent performance, shall be used in cavities wider than 75 mm.

Table **3.4** **Parapet walls: height**

Wall type	Thickness (mm)	Parapet height H shall not be more than (mm)
(a) Cavity wall		
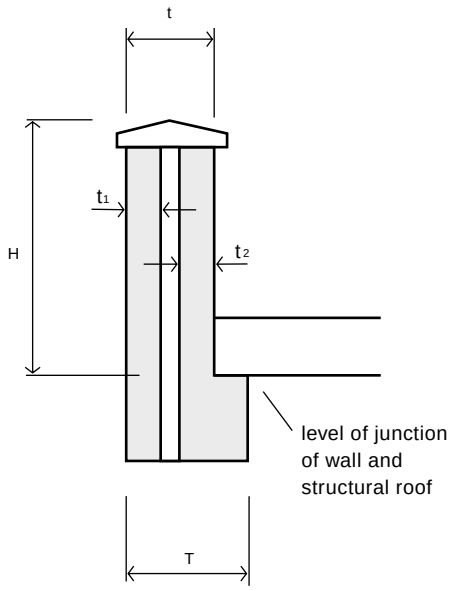	$t_1 + t_2$ less than or equal to 200	600
	$t_1 + t_2$ more than 200 but not more than 250	860
(a) Solid wall		
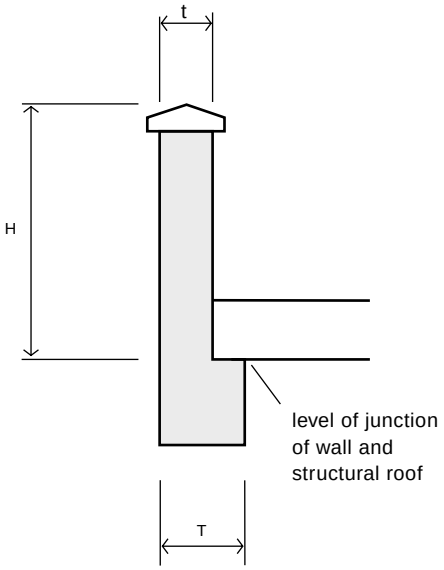	**t** = 150	600
	t = 190	760
	t = 215	860

Note

t shall not be greater than **T**

3.12 Single leaves of certain external walls – Notwithstanding paragraph 3.6 the single leaf of external walls of small single storey non-residential buildings and of annexes need be only 90 mm thick.

3.13 Modular bricks and blocks – Where walls are constructed of bricks or blocks having modular dimensions derived from BS 6750: 1986, wall thicknesses prescribed in this Section which derive from a dimension of a brick or block may be reduced by an amount not exceeding the deviation from work size permitted by a British Standard relating to equivalent sized bricks or blocks made of the same material.

Conditions relating to the building of which the wall forms part

3.14 This Section applies only to buildings having proportions within the following parameters –

(a) residential buildings of not more than 3 storeys –

(i) the maximum height of the building measured from the lowest finished ground level adjoining the building to the highest point of any wall or roof shall not be greater than 15 m;

(ii) the height of the building **H** shall not exceed twice the least width of the building **W1**;

(iii) the height of a wing **H2** shall not exceed twice the least width of the wing **W2** when the projection **P** exceeds twice the width **W2** (see Diagram 3.3).

(b) small single storey non-residential buildings – height **H** shall not exceed 3 m and **W** shall not exceed 9 m (see Diagram 3.4).

(c) annexes – height **H** shall not exceed 3 m (see Diagram 3.5).

Diagram **3.3 Size and proportion of building**

see para 3.14(a)

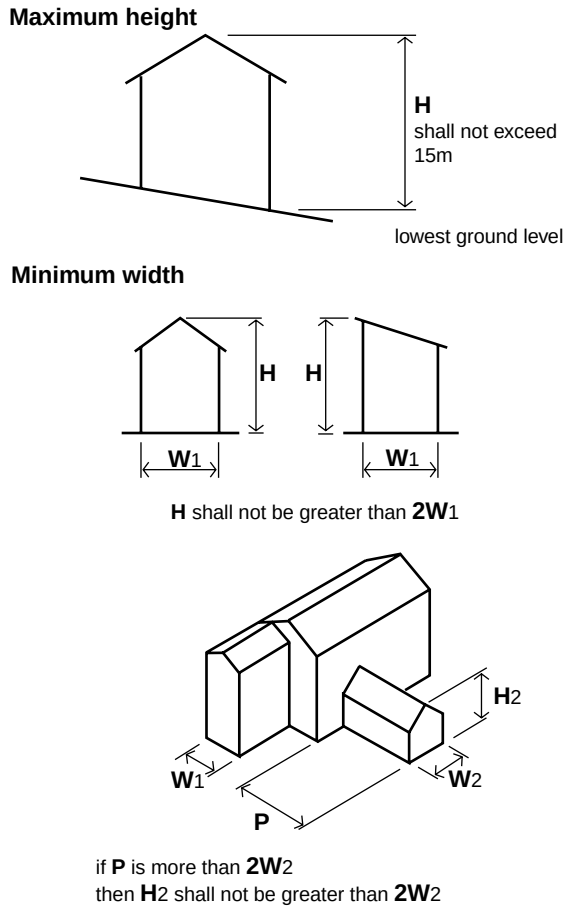

Diagram **3.4**

see para 3.14(b)

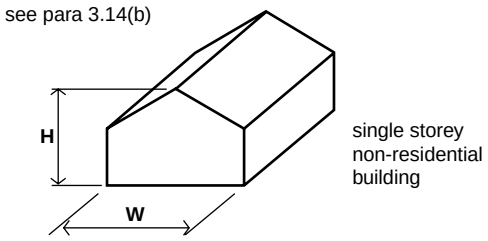

Diagram **3.5**

see para 3.14(c)

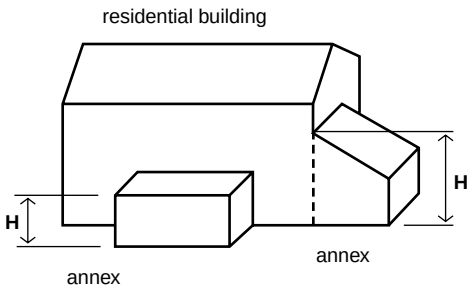

3.15 Maximum floor area – Floors enclosed by structural walls on all sides shall not exceed 70 m^2 in area; and floors without a structural wall on one side shall not exceed 30 m^2 (see Diagram 3.6).

Diagram **3.6**

see para 3.15

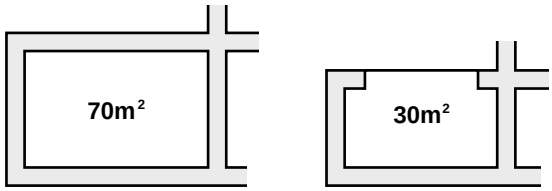

3.16 Imposed loads on roofs, floors and ceilings – The imposed loads shall not exceed those given in Table 3.5.

Table **3.5 Imposed loads**

Element	Loading
roof	distributed load: 1.00 kN/m^2 for spans not exceeding 12 m 1.5 kN/m^2 for spans not exceeding 6 m
floors	distributed load: 2.00kN/m^2
ceilings	distributed load: 0.25kN/m^2 together with concentrated load: 0.9kN

3.17 Design Wind Speed – The provisions in this Section are adequate where the design wind speed (Vs) for the building does not exceed 44 metres/second, as determined in accordance with CP 3: Chapter V: Part 2: 1972.

The maximum building heights given in Tables 3.6(a) and 3.6(b) correlate to this value of Vs for various site exposure conditions and basic wind speeds.

The basic wind speed for the site shall be determined by reference to Diagram 3.7.

Table 3.6(a) Maximum height of buildings on level or slightly sloping sites

Maximum building height (metres)

Basic wind speed m/s	Ground roughness category			
	Open countryside with no obstructions	Open countryside with scattered windbreaks	Country with many windbreaks, small towns, outskirts of large cities	Surface with large and frequent obstructions, city centres
44	15	15	15	15
46	11	15	15	15
48	9	13	15	15
50	7	10	15	15
52	6	9	15	15
54	4.5	8	14	15
56	3	7	13	15

Table 3.6(b) Maximum height of buildings on steeply sloping sites, including hill, cliff and escarpment sites

Maximum building height (metres)

Basic wind speed m/s	Ground roughness category			
	Open countryside with no obstructions	Open countryside with scattered windbreaks	Country with many windbreaks, small towns, outskirts of large cities	Surface with large and frequent obstructions, city centres
44	*	5	10	15
46	*	4	8	15
48	*	3	6.5	14
50	*	*	5	12
52	*	*	4	10
54	*	*	3	8.5
56	*	*	*	7

* beyond the scope of this Section

Diagram **3.7** **Map showing basic wind speeds in m/s**

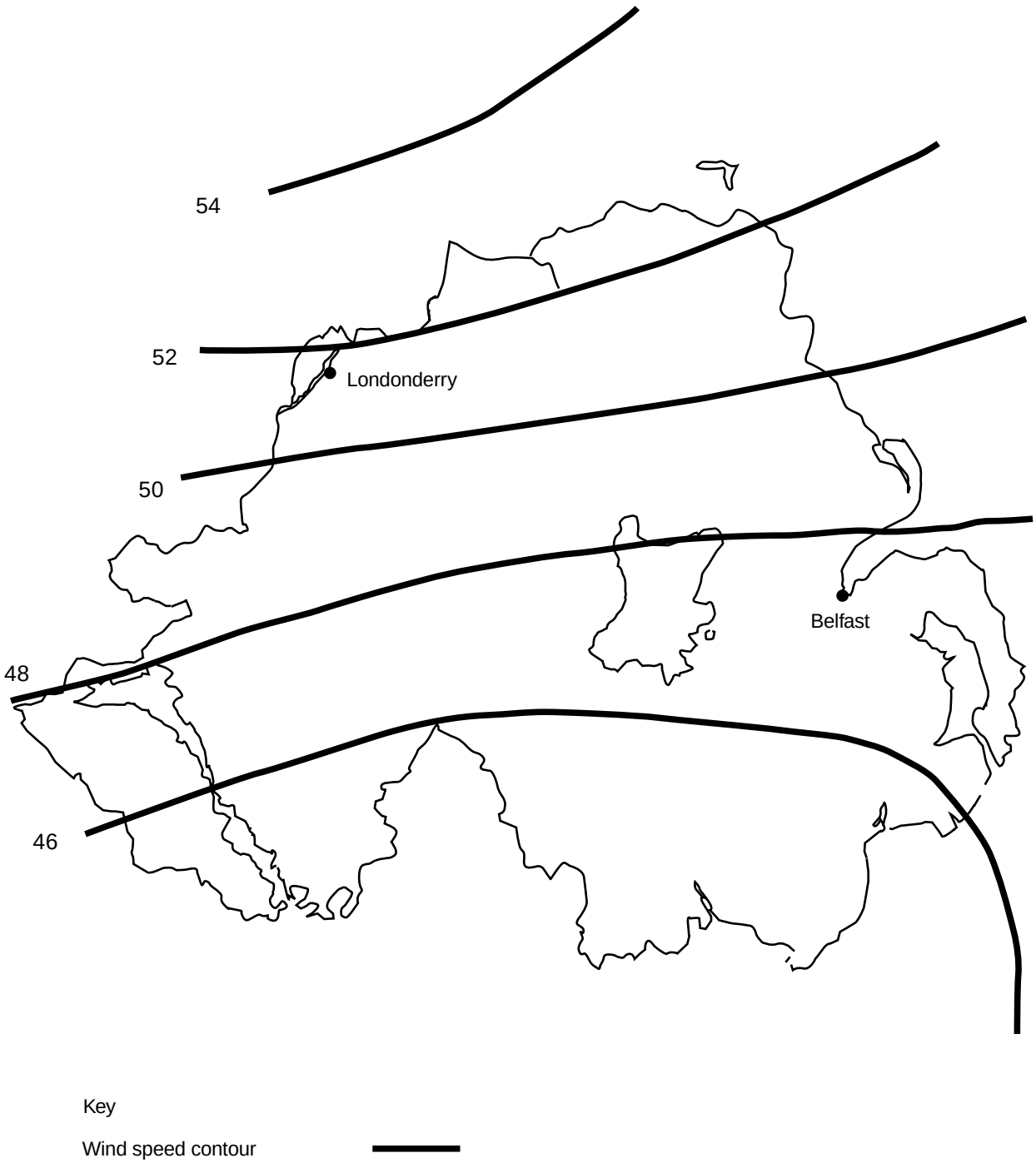

Conditions relating to the wall

3.18 Maximum allowable length and height of the wall – Walls shall not exceed 12 m in length, measured from centre to centre of buttressing walls, piers or chimneys providing restraint. Walls shall not exceed 12m in height (see also Table 3.2).

3.19 Rules of measurement for heights of walls and storeys – The height of a wall or a storey shall be measured in accordance with the rules in Diagram 3.8.

Construction materials and workmanship

3.20 Wall ties – Wall ties shall comply with BS 1243: 1978 or be of a not less suitable type. In conditions of severe exposure austenitic stainless steel or suitable non-ferrous ties shall be used (for definition of severe exposure, refer to BS 5628: Part 3: 1985).

3.21 Brick and block construction – Walls shall be properly bonded and solidly put together with mortar and constructed of–

(a) clay bricks conforming to BS 3921: 1985 or BS 6649: 1985; or

(b) calcium silicate bricks conforming to BS 187: 1978 or BS 6649: 1985; or

(c) concrete bricks or blocks conforming to BS 6073: Part 1: 1981; or

(d) square dressed natural stone conforming to the appropriate requirements described in BS 5390: 1976 (1984).

3.22 Compressive strength of bricks and blocks – Bricks and blocks, when tested in accordance with the appropriate British Standard, shall have a compressive strength not less than the values given in Diagram 3.9.

3.23 Mortar – Mortar shall be –

(a) to the proportions –

(i) given in BS 5628: Part 1: 1992 for mortar designation (iii); or

(ii) 1:1:6 Portland Cement, lime and fine aggregate measured by volume of dry materials; or

(b) of equivalent or where appropriate of a greater strength, which is compatible with the masonry units and position of use.

Diagram **3.8** **Measuring storey and wall heights**

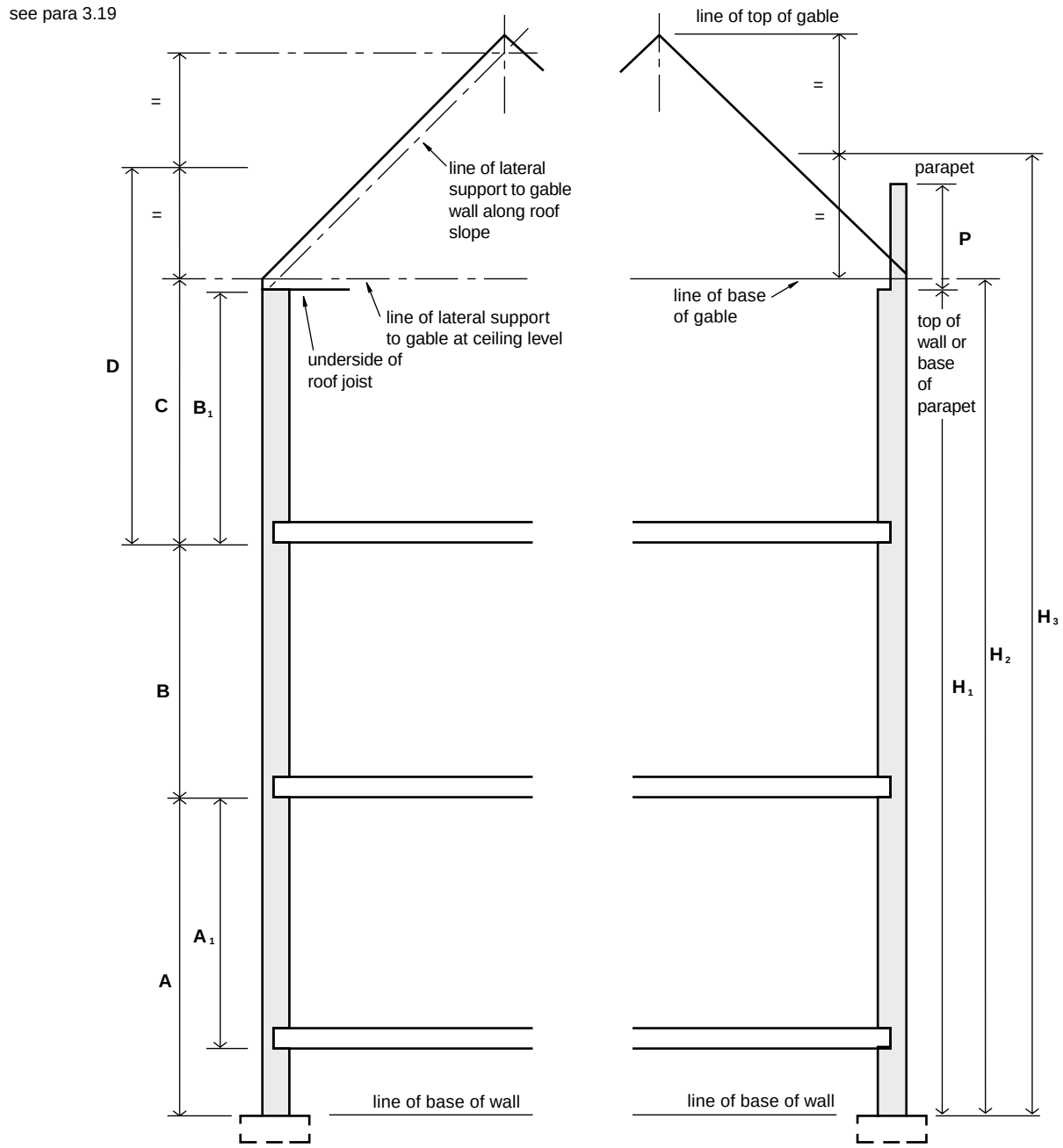

Key

(a) Measuring storey heights

A is the ground storey height if the ground floor is a suspended timber floor or a structurally separate ground floor slab

A_1 is the ground storey height if the ground floor is a suspended concrete floor bearing on the external wall

B is the intermediate storey height

B_1 is the top storey height for walls which do not include a gable

C is the top storey height where lateral support is given to the gable at both ceiling level and along the roof slope

D is the top storey height for walls which include a gable where lateral support is given to the gable only along the roof slope

(b) Measuring wall heights

H_1 is the height of a wall that does not include a gable (if the wall has a parapet see P)

H_2 is the height of a compartment or separating wall which includes a gable

H_3 is the height of a wall (except a compartment or separating wall) which includes a gable

P if the parapet height is more than 1.2 m add the height to H_1

Diagram **3.9** **Compressive strength of brick and block units**

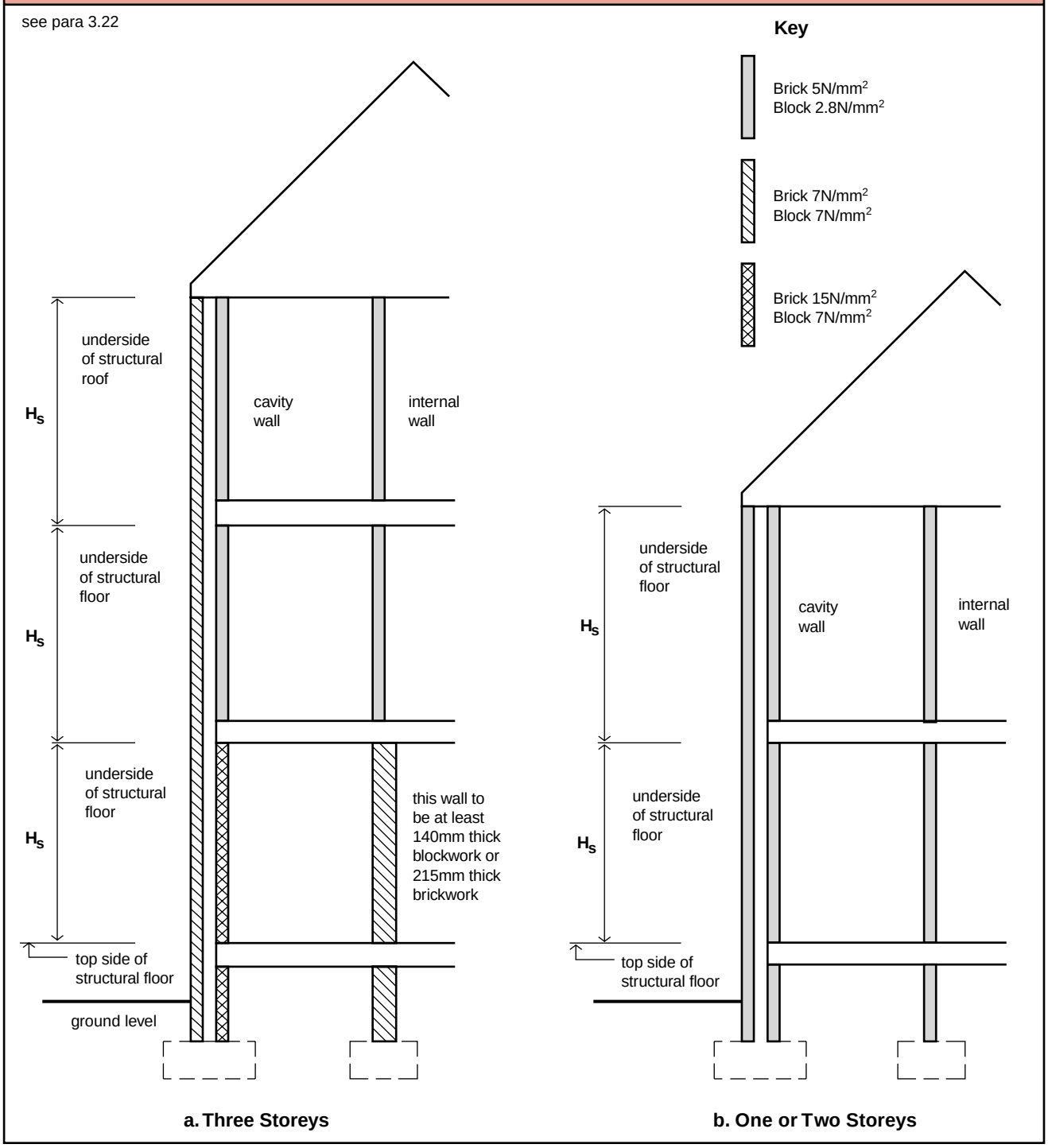

Notes

1. If Hs is not greater than 2.7 m, the compressive strength of bricks or blocks shall be used in walls as indicated by the key.

2. If Hs is greater than 2.7 m, the compressive strength of bricks or blocks used in the wall shall either be at least 7N/sq mm or as indicated by the key, whichever is the greater.

3. If the external wall is solid construction, the bricks or blocks shall have a compressive strength of at least that shown for the internal leaf of a cavity wall in the same position.

4. This diagram shall only be used to determine the compressive strength of brick and block units for walls of two and three storey buildings where the roof construction is of timber.

Loading on walls

3.24 Maximum span of floors – The span for any floor supported by a wall shall not exceed 6 m, where the span is measured centre-to-centre of bearing (see Diagram 3.10).

Diagram **3.10**

see para 3.24

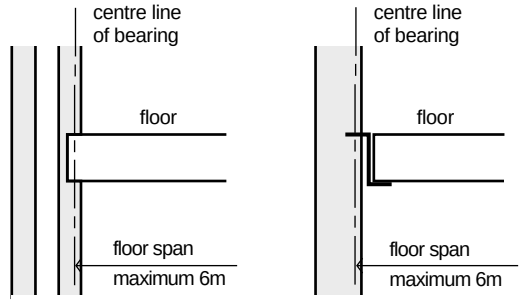

(a)
Floor member bearing on wall

(b)
Floor member bearing on joist hanger

3.25 Other loading conditions – Vertical and lateral loading shall be limited to and assessed in the following ways –

(a) the combined dead and imposed load shall not exceed 70 kN/m at base of wall (see Diagram 3.11);

(b) vertical loading on walls shall be distributed. This may be assumed for concrete floor slabs, precast concrete floors, and timber floors designed in accordance with Section 2, and where the bearing length for lintels is 150 mm or greater. Where a lintel has a clear span of 1200 mm or less the bearing length may be reduced to 100 mm. Where lintels carry a concrete floor the bearing length shall not be less than 150 mm or L/10, whichever is the greater and where L is the clear span of the lintel;

(c) walls must not be subject to lateral load other than from wind, and that covered by paragraph 3.25(d); and

(d) differences in level of ground or other solid construction between one side of the wall and the other shall not exceed 4 times the thickness of the wall as shown in Diagram 3.11.

End restraint

3.26 Buttressing walls, piers and chimneys– The ends of every wall, except single leaf walls less than 2.5 m in height and length in small single storey non-residential buildings and annexes shall be bonded or otherwise securely tied throughout their full height to a buttressing wall, pier or chimney. Long walls may be provided with intermediate support, dividing the wall into distinct lengths; each distinct length L is a supported wall for the purposes of this Section. The buttressing wall, pier or chimney shall provide support from the base to the full height of the wall.

Diagram **3.11**

see para 3.25

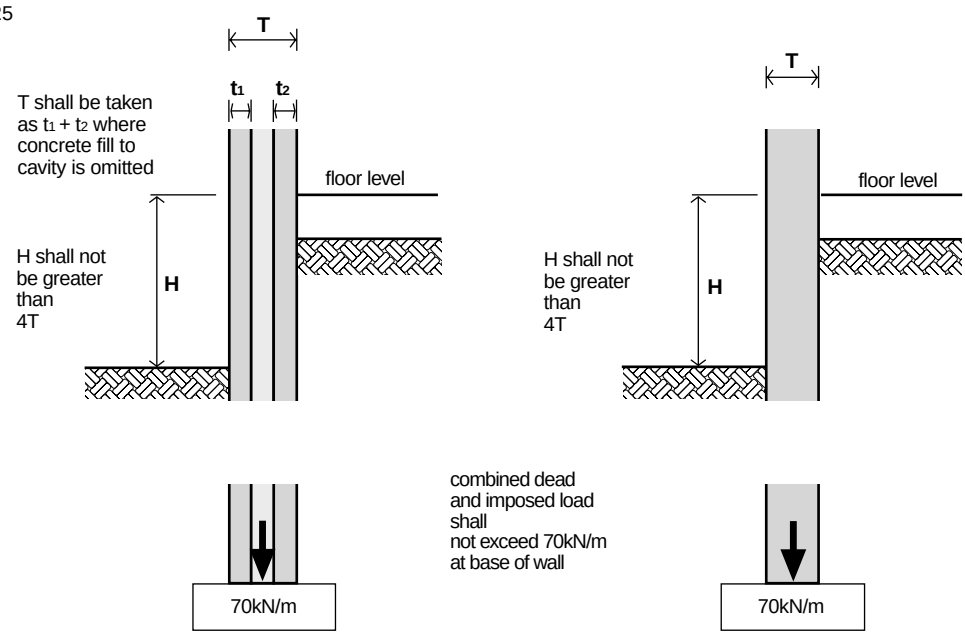

Diagram **3.12 Openings in a buttressing wall**

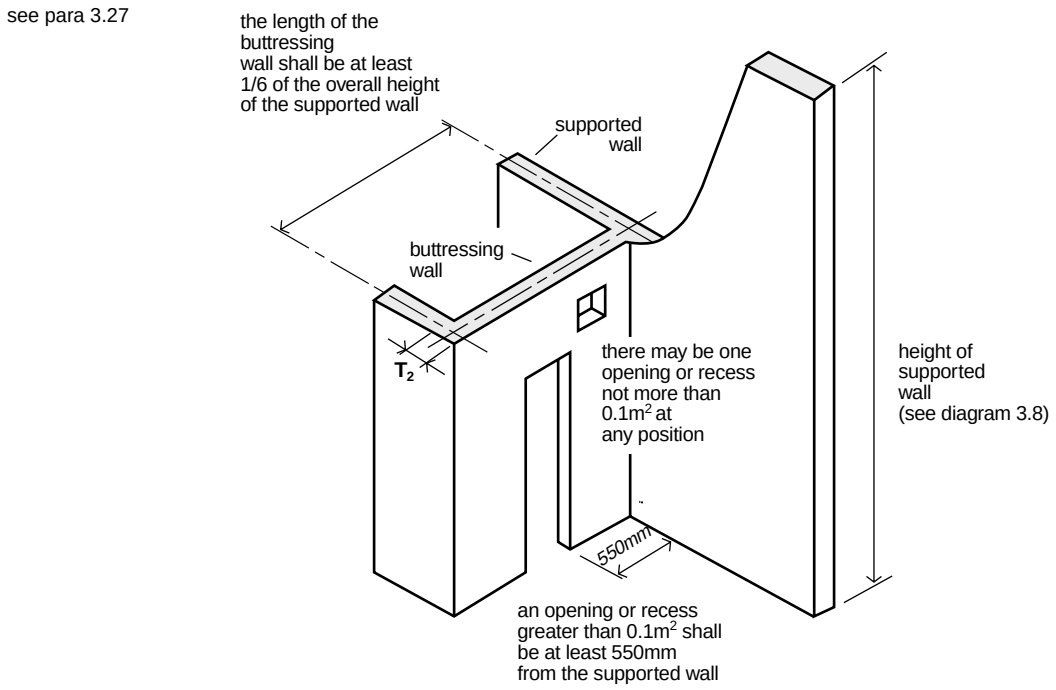

Notes

1. The buttressing wall shall be bonded or securely tied to the supported wall and at the other end to a buttressing wall, pier or chimney.

2. Openings or recesses in the buttressing wall shall not exceed those shown – the position and shape of the openings shall not impair the lateral support to be given by the buttressing wall.

3. Refer to Diagram 3.8 for the rules for measuring the height of the supported wall.

3.27 Design criteria for buttressing walls – Diagram 3.12 gives certain rules for buttressing walls. Additionally if the buttressing wall is not itself a supported wall, its thickness T_2 shall not be less than –

(a) half the thickness required by this Section for an external or separating wall of similar height and length, less 5 mm; or

(b) 75 mm if the wall forms part of a house and does not exceed 6m in total height and 10 m in length; or

(c) 90 mm in any other cases.

3.28 Design criteria for piers and chimneys providing restraint – Piers shall measure at least 3 times the thickness of the supported wall and chimneys twice the thickness, measured at right angles to the wall. Piers shall have a minimum width of 190 mm (see Diagram 3.13).

Diagram **3.13 Buttressing**

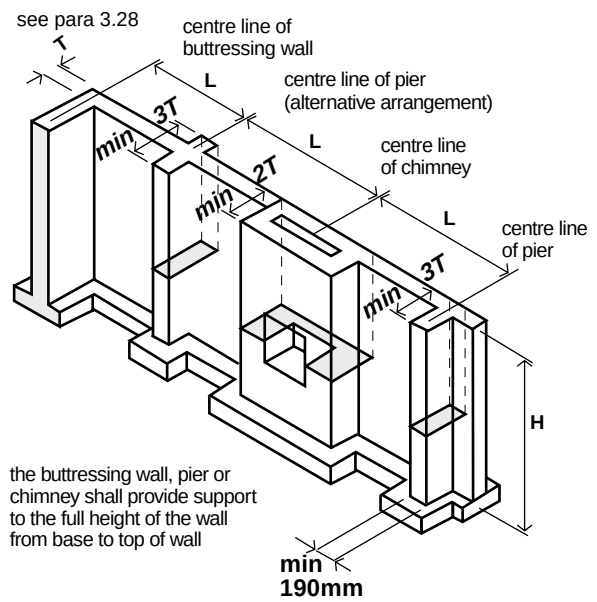

L = length of wall (see paragraph 3.26)

The sectional area on plan of chimneys (excluding openings for fireplaces and flues) shall be not less than the area required for a pier in the same wall, and the overall thickness shall not be less than twice the required thickness of the supported wall (see Diagram 3.13).

Openings, recesses, overhangs and chases

3.29 General – The number, size and position of openings and recesses shall not impair the stability of a wall or the lateral support afforded by a buttressing wall to a supported wall.

Construction over openings and recesses shall be adequately supported.

3.30 Dimensional criteria for openings and recesses – The dimensional criteria are given in Diagram 3.14 and Table 3.7.

3.31 Chases – All chases shall comply with the following –

(a) vertical chases shall not be deeper than 1/3 of the wall thickness or, in cavity walls 1/3 of the thickness of the leaf;

(b) horizontal chases shall not be deeper than 1/6 of the thickness of the leaf or wall; and

(c) chases shall not be so positioned as to impair the stability of the wall, particularly where hollow blocks are used.

3.32 Overhangs – The amount of any projection shall not impair the stability of the wall.

Diagram **3.14 Sizes of openings and recesses**

see para 3.30

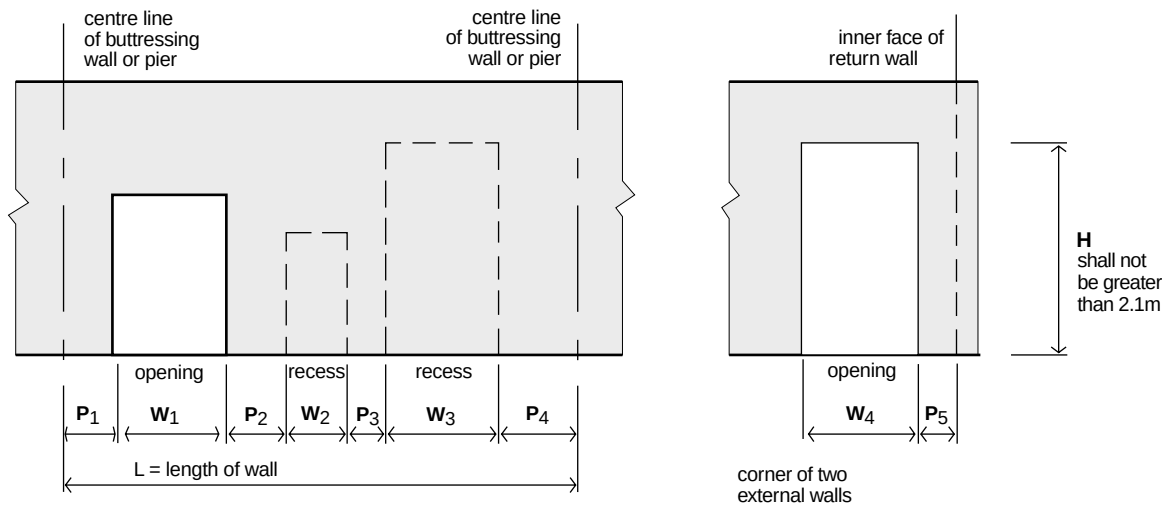

Notes

Requirements (refer to Table 3.7 for values of factor **X**)

1 $W_1 + W_2 + W_3$ shall not exceed $\frac{2L}{3}$

2 W_1, W_2, W_3 or W_4 shall not exceed 3 m.

3 P_1 shall be greater than or equal to $\frac{W_1}{X}$

4 P_2 shall be greater than or equal to $\frac{W_1 + W_2}{X}$

5 P_3 shall be greater than or equal to $\frac{W_2 + W_3}{X}$

6 P_4 shall be greater than or equal to $\frac{W_3}{X}$

7 **P5** shall be greater than or equal to $\frac{W_4}{X}$ but

shall not be less than 385 mm. In this case the height **H** or the opening shall not exceed 2.1 m.

8 The value of the factor **X** shall be taken from Table 3.7 or it can be given the value 6, provided the compressive strength of the bricks or blocks (in the case of a cavity wall – in the loaded leaf) is not less than 7N/mm^2.

Table 3.7 Value of factor 'X' (see Diagram 3.14)

Nature of roof span	Maximum roof span (m)	Minimum thickness of wall inner leaf (mm)	Span of floor is parallel to wall	Span of timber floor into wall		Span of concrete floor into wall	
				max 4.5 m	max 6.0 m	max 4.5 m	max 6.0 m
			Value of factor 'X'				
roof spans parallel to wall	not applicable	100	6	6	6	6	6
		90	6	6	6	6	5
timber roof spans into wall	9	100	6	6	5	4	3
		90	6	4	4	3	3

Lateral support by floors and roofs

3.33 Walls in each storey of a building shall extend to the full height of that storey, and have horizontal lateral supports to restrict movement of the wall at right angles to its plane.

3.34 Floors and roofs shall –

(a) act to transfer lateral forces from walls to buttressing walls, piers or chimneys; and

(b) be secured to the supported wall by connections specified in paragraphs 3.35 and 3.36.

3.35 The requirements for lateral support of walls at floor and roof levels are given in paragraphs 3.36 and 3.37 and in Table 3.8.

Table 3.8 Lateral support for walls

Wall type	Wall length	Lateral support required
solid or cavity: external compartment separating	any length	roof lateral support by every roof forming a junction with the supported wall
	greater than 3m	floor lateral support by every floor forming a junction with the supported wall
internal load-bearing (not being a compartment or separating wall)	any length	roof or floor lateral support at the top of each storey

3.36 Wall shall be strapped to floors above ground level, at intervals not exceeding 2 m and as shown in Diagrams 3.15(a), (b) and (c) by galvanised mild steel or other durable metal straps which have a minimum cross-section of 30 mm x 5 mm.

Straps need not be provided –

(a) in the longitudinal direction of floor joists in houses of not more than 2 storeys, if the joists are at not more than 1.2 m centres and have at least 90 mm bearing on the supported walls or 75 mm bearing on a timber wall-plate at each each;

(b) in the longitudinal direction of floor joists in houses note more than 2 storeys, if the joists are carried on the supported wall by joist hangers of the restraint type described in BS 5628: Part 1: 1992 and shown in Diagram 3.15(d), and are incorporated at not more than 2 m centres; and

(c) when a concrete floor has at least 90 mm bearing on the supported wall (see Diagram 3.15(e)).

Diagram **3.15 Lateral support by floors**

see para 3.36

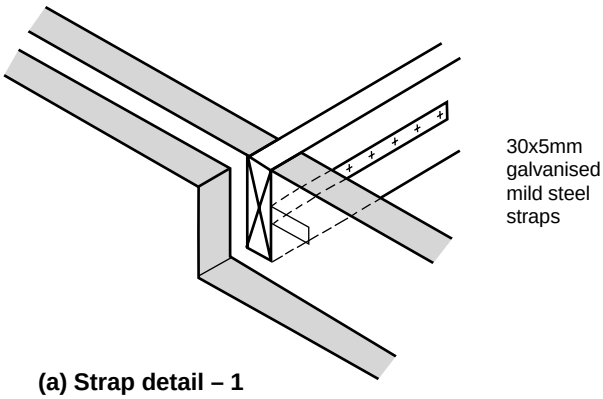

(a) Strap detail – 1

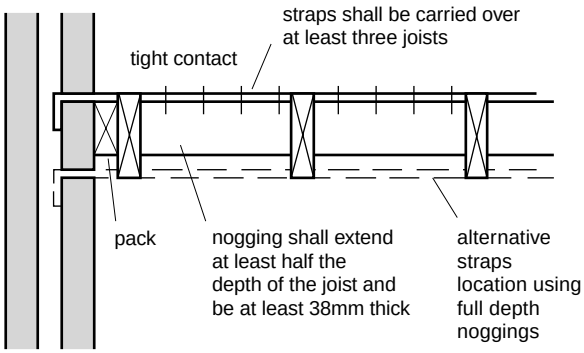

(b) Strap detail – 2 (Similar detail to be used where concrete floor or roof abuts a wall)

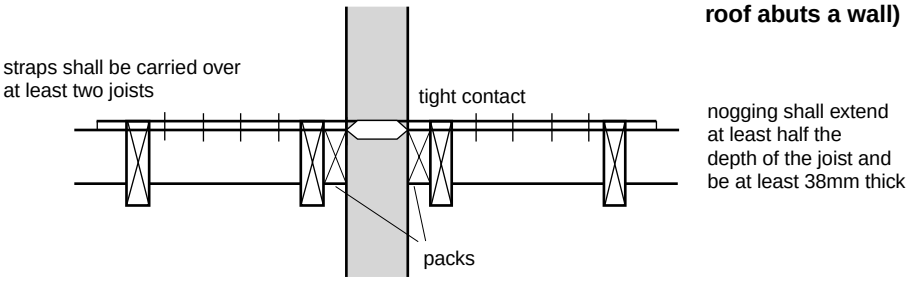

(c) Strap detail – 3 (internal walls)

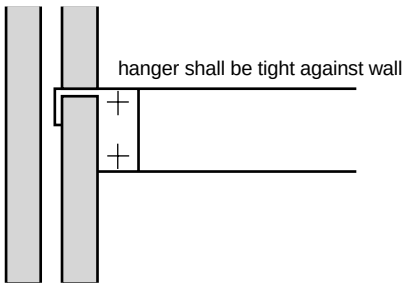

(d) Restraint type joist hanger

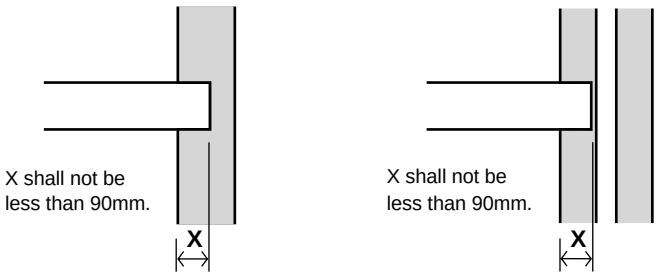

(e) Restraint by concrete floor or roof

3.37 Gable walls shall be strapped to roofs as shown in Diagram 3.16(a) and (b) by galvanised mild steel or other durable metal straps which have a minimum cross-section of 30 mm x 5 mm. Vertical strapping at least 1 m long having a minimum cross-section of 30 mm x 5 mm shall be provided at eaves level at intervals not exceeding 2 m (see Diagram 3.16(c) and 3.16(d)). Vertical strapping is not required if the roof –

(a) has a pitch of 15° or more;

(b) is tiled or slated;

(c) is of a type known by local experience to be resistant to wind gusts; and

(d) has main timber members spanning onto the supported wall at not more than 1.2 m centres.

Diagram **3.16 Lateral support at roof level**

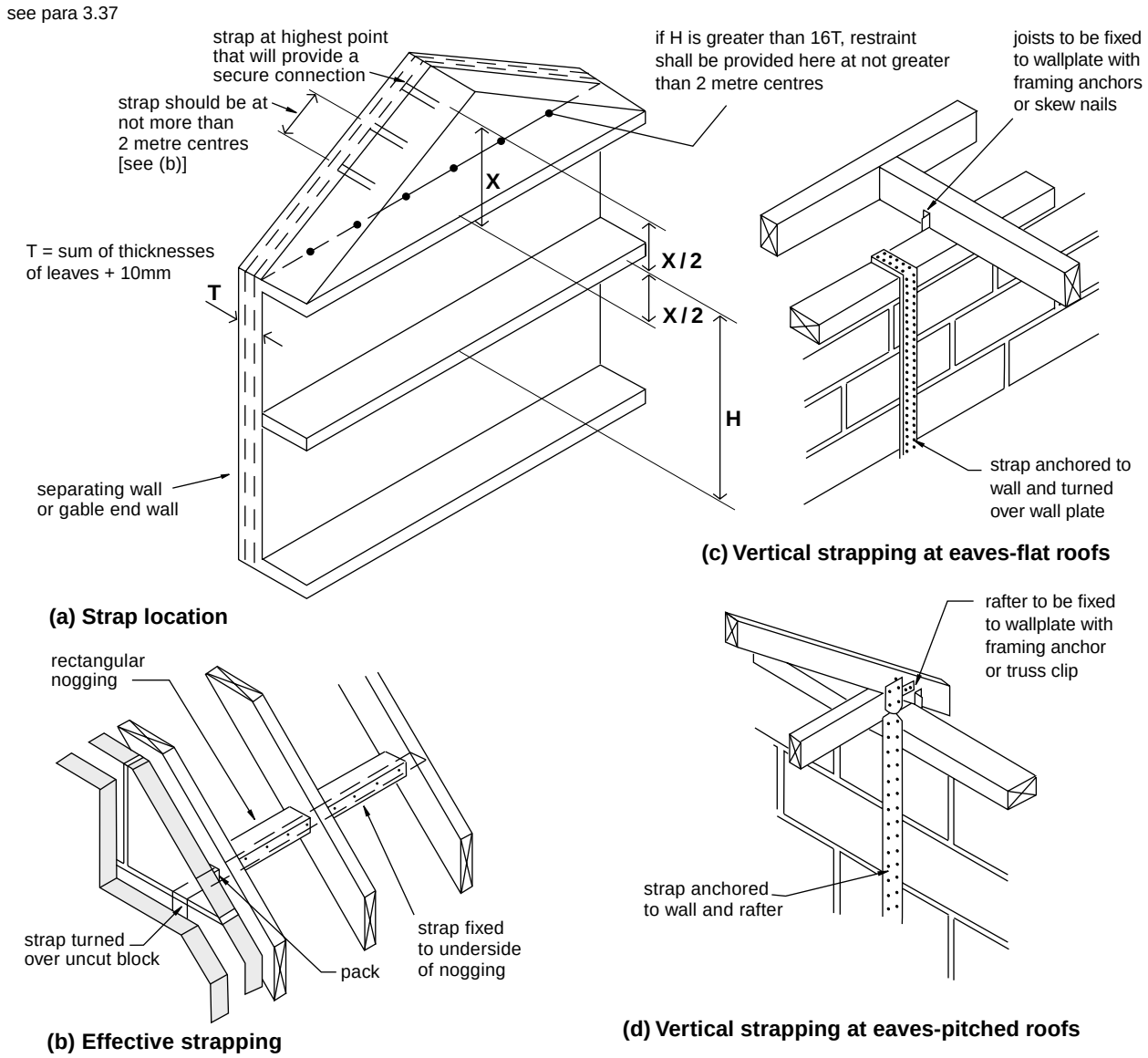

Interruption of lateral support

3.38 Where an opening in a floor or roof for a stairway or the like adjoins a supported wall and interrupts the continuity of lateral support, the following conditions shall be satisfied for the purposes of Section 3 –

(a) the maximum permitted length of the opening shall be 3 m, measured parallel to the supported wall;

(b) where a connection is provided by means other than by anchor, this must be provided throughout the length of each portion of the wall situated on each side of the opening;

(c) where connection is provided by mild steel anchors, these must be spaced closer than 2 m on each side of the opening to provide the same number of anchors as if there were no opening; and

(d) no ther interruption of lateral support is permissible.

External walls of small single storey non-residential buildings and annexes

3.39 Single leaf external walls which –

(a) enclose a floor not exceeding 36 m2 in area;

(b) are of solid construction in bricks and blocks, of 90 mm minimum thickness;

(c) are not subject to any load other than wind load and the distributed vertical load of the roof of the small building or annex; and

(d) are greater then 2.5 m in length or height,

shall be bonded to each end and intermediately to buttressing walls or piers as shown in Diagram 3.17.

Diagram **3.17** **Pier size and spacing**

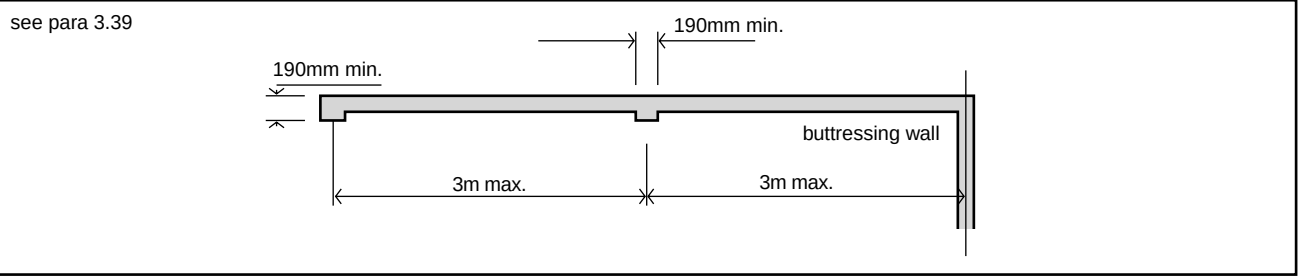

SECTION 4 – Proportions for masonry chimneys above the roof surface

Height to width relationship

4.1 Where a chimney is not adequately supported by ties or securely restrained in any way, its height, measured from the highest point of intersection with the roof surface, gutter, etc, shall not exceed 4.5 W, where –

W is the least horizontal dimension of the chimney measured at the same point of intersection; and

H is measured to the top of any chimney pot or other flue terminal.

Where the density of the masonry is less than 1,500 kg/m^3 the 4.5 height factor shall be reduced pro-rata.

(See Diagram 4.1).

Diagram **4.1 Proportions for masonry chimneys**

see para 4.1

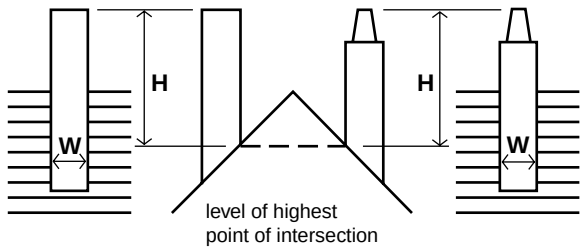

SECTION 5 – Strip foundations of plain concrete

Conditions relating to the subsoil

5.1 There shall not be –

(a) made ground, peat or wide variation in type of subsoil within the loaded area;

(b) weaker type of soil at such a depth below the soil on which the foundation rests as could impair the stability of the structure; or

(c) soil movement within the loaded area resulting from seasonal weather changes.

Design provisions

5.2 The following design provisions relate to foundations –

(a) the foundations shall be situated centrally under the wall;

(b) strip foundations shall have the minimum widths given in Table 5.1;

(c) minimum thickness T of concrete foundations shall be 150 mm or P, whichever is the greater, where P is derived using Table 5.1 (see Diagram 5.1(a) and (b));

(d) in chemically non-aggressive soils concrete shall be composed of cement to BS 12: 1991 and fine and course aggregate conforming to BS 882: 1992, the mix being –

(i) in the proportion of 50 kg of cement to not more than 0.1 m^3 of fine aggregate and 0.2 m^3 of coarse aggregate; or

(ii) grade ST1 to BS 5328: Part 2: 1990;

(e) in chemically aggressive soil conditions an appropriate concrete mix in BS 5328: Part 1: 1990 shall be used;

(f) foundations stepped on evaluation shall overlap by twice the height of the step, the thickness of the foundation, or 300 mm, whichever is greater (see Diagram 5.2);

(g) steps in foundations shall not be of greater height than the thickness of the foundation (see Diagram 5.2); and

(h) foundations of piers, buttresses and chimneys shall project as indicated in Diagram 5.3 and the projection X shall not be less than P.

Diagram 5.2 Elevation of stepped foundation

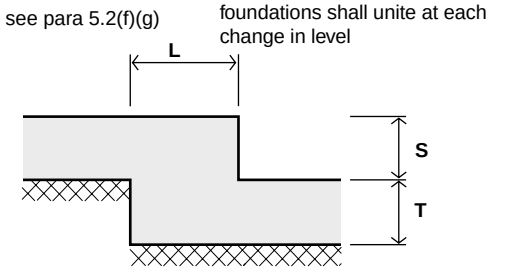

minimum overlap L = twice height of step, or thickness of foundation, or 300mm, whichever is greater

S shall not be greater than T

Diagram 5.1 Foundation dimensions

see para 5.2(c)

in both the cases shown in this diagram, the thickness of the foundation shall either be equal to P or 150mm, whichever is greater

WT = wall thickness

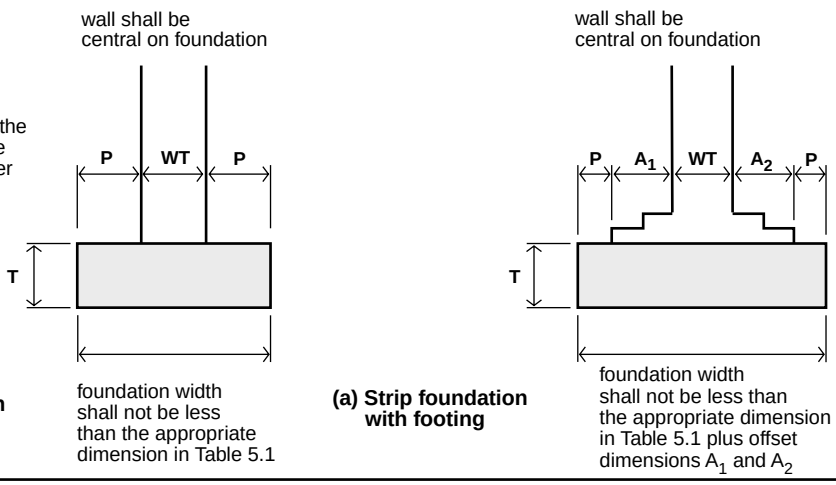

(a) Strip foundation

foundation width shall not be less than the appropriate dimension in Table 5.1

(a) Strip foundation with footing

foundation width shall not be less than the appropriate dimension in Table 5.1 plus offset dimensions A_1 and A_2

Minimum width of strip foundations

5.3 Provided that the conditions relating to the subsoil (paragraph 5.1) and design provisions relating to the foundations (paragraph 5.2) are observed, the type and condition of subsoil are known and the loading at the base of the wall is within acceptable limits, the widths of foundations given in Table 5.1 may be used.

Diagram **5.3 Piers and chimneys**

see para 5.2(h)

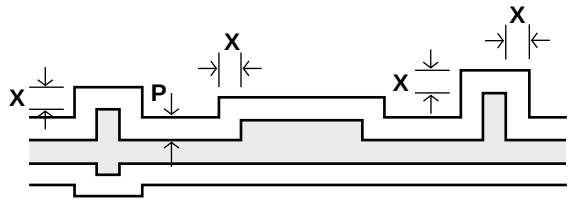

Projection X shall not be less than P

Table **5.1 Minimum width of strip foundations**

Type of subsoil	Condition of subsoil	Field test applicable	Total load of load-bearing walling not more than [kN/linear metre] 20	30	40	50	60	70
			Minimum width of strip foundation (mm)					
I rock	not inferior to sandstone, limestone or firm chalk	requires at least a pneumatic or other mechanically operated pick for excavation	in each case equal to the width of wall					
II gravel sand	compact compact	requires pick for excavation. Wooden peg 50 mm square in cross-section hard to drive beyond 150 mm	250	300	400	500	600	650
III clay sandy clay	stiff stiff	cannot be moulded by the fingers and requires a pick or pneumatic or other mechanically operated spade for its removal	250	300	400	500	600	650
IV clay sandy clay	firm firm	can be moulded by substantial pressure with the fingers and can be excavated with graft or spade	300	350	450	600	750	850
V sand silty sand clayey sand	loose loose loose	can be excavated with a spade. Wooden peg 50 mm square in cross-section can be easily driven	400	600	Note In relation to types V, VI and VII foundations do not fall within the provisions of this section if the total load exceeds 30kN/m.			
VI silt clay sandy clay silty clay	soft soft soft soft	fairly easily moulded in the fingers and readily excavated	450	650				
VII silt clay sandy clay silty clay	very soft very soft very soft very soft	natural sample in winter conditions exudes between fingers when squeezed in fist	600	850				

SECTION 6 – Disproportionate collapse

6.1 Application

This Section gives procedures which shall be followed when complying with the provisions of Regulation D5.

6.2 Procedures

(a) Provide effective horizontal and vertical ties in accordance with the recommendations given in the British Standards listed in Regulation D5. In this case, no further measures are likely to be necessary.

(b) Where effective horizontal tying is provided but it is not possible to provide effective tying of any of the vertical loadbearing elements, then each such untied element shall be considered to be notionally removed, one at a time in each storey in turn, to check that its removal would allow the rest of the structure to bridge over the missing element albeit in a substantially deformed condition.

In considering this option, it should be recognised that certain areas of the structure may remain vulnerable to collapse. In these instances, the area at risk of collapse shall be limited to that given under sub-paragraph (c).

If it is not possible to bridge over the missing element, that element shall be designed as a key element or protected member.

(c) Where it is not possible to provide effective horizontal and vertical tying of any of the loadbearing elements, then each such element shall be considered to be notionally removed, one at a time in each storey in turn, to check that on its removal, the area at risk of collapse of the structure within the storey and the immediately adjacent storeys is limited to –

(i) 70 m^2; or

(ii) 15% of the area of the storey;

whichever is the less.

(It should be noted that this area is the area of floor at risk of collapse on removal of the element and not necessarily the entire area supported by the element in conjunction with other elements.)

If, on removal of an element, it is not possible to limit the area put at risk of collapse as above, that element shall be designed as a key element or protected member.

6.3 Key elements and protected members

The design of key elements and protected members shall comply with the provisions of Regulations D5 and the relevant recommendations of the British Standards listed in that regulation.

APPENDIX – Publications referred to

BS 12: 1991 Specification for Portland cements.
AMD 7122: JAN. 1992.

BS 187: 1978 Specification for calcium silicate (sandlime and flintlime) bricks
AMD 5427: AUG. 1987.

BS 882: 1992 Specification for aggregates from natural sources for concrete.

BS 1243: 1978 Specification for metal ties for cavity wall construction.
AMD 3651: APR. 1981,
AMD 4024: JULY 1982.

BS 1297: 1987 Specification for tongued and grooved softwood flooring.

BS 3921: 1985 Specification for clay bricks.

BS 4471: 1987 Specification for sizes of sawn and processed softwood.

BS 4978: 1988 Specification for softwood grades for structural use.
AMD 6400: JUNE 1991,
AMD 6915: DEC. 1991.

BS 5268: Structural use of timber:

Part 2: 1991 Code of practice for permissible stress design, materials and workmanship.
Part 3: 1985 Code of practice for trussed rafter roofs.
AMD 5931: JUNE 1988.

BS 5328: Concrete:

Part 1: 1991 Guide to specifying concrete.
AMD 7174: JULY 1992.

Part 2: 1991 Methods for specifying concrete mixes.
AMD 7175: JULY 1992.

BS 5390: 1976 (1984) Code of practice for stone masonry.
AMD 4272: JUNE 1983.

BS 5628: Code of practice for use of masonry:

Part 1: 1992 Structural use of unreinforced masonry.
AMD 7745: JULY 1993.

Part 3: 1985 Materials and components, design and workmanship.
AMD 4974: NOV. 1985.

BS 6073: Precast concrete masonry units:

Part 1: 1981 Specification for precast concrete masonry units.
AMD 3944: MAR. 1982,
AMD 4462: FEB. 1984.

BS 6649: 1985 Specification for clay and calcium silicate modular bricks.

BS 6750: 1986 Specification for modular co-ordination in building.

CP3: Chapter V: Loading:

Part 2: 1972 Wind loads.
AMD 4952: JAN. 1986,
AMD 5152: MAR. 1986,
AMD 5343: JUNE 1986,
AMD 6028: SEP. 1988,
AMD 7908: SEP. 1993.

Printed in the United Kingdom for HMSO
Dd 8713948 C20. 6/02. 55-9972.