Introduction

This document contains corrections, clarifications and revisions to Technical Booklets D, E, G, H, L, N and R. These Technical Booklets were prepared by the Department of the Environment for Northern Ireland and their dates of issue are given in the Contents.

Contents

Technical Booklet	Date of Issue	Page
D – Structure	June 1994	**ii**
E – Fire safety	June 1994	**iii**
G – Sound	June 1990	**iv**
H – Stairs, ramps and guarding	June 1994	**v**
L – Heat producing appliances	July 1991	**vi**
N – Drainage	June 1990	**viii**
R – Access and facilities for disabled people	June 1994	**ix**
Replacement pages	–	**xi**

Technical Booklet D – Structure

Amendments to Technical Booklet D –

(1) *Page 2. Under the heading* ***Reference*** *–*

In line 5 delete “28 February 1994” and substitute “31 January 1998”.

(2) *Page 3. paragraph 1.2 definition of* ***Spacing*** *–*

In line 4 delete “plan” and substitute “plane”.

(3) *Page 3. paragraph 1.2 definition of* ***Span*** *–*

In line 6 delete “clean” and substitute “clear”.

(4) *Page 11. Table 2.7 –*

In column 1 delete “**Size of joist**” and substitute “**Size of binder**”.

(5) *Pages 12, 14, 16, 18, 20 and 22. Diagram to Table –*

Delete existing Diagram and substitute new Diagram.

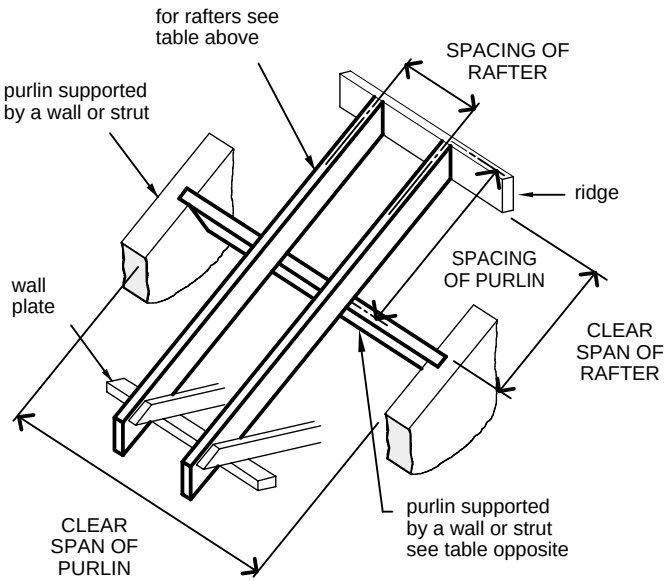

(6) *Page 15. Table 2.11 –*

In line under heading delete “clean” and substitute “clear”.

(7) *Page 26. Table 2.22 –*

In column 2 row 9 delete “3.00” and substitute “3.30”.

(8) *Page 36. paragraph 3.12 –*

In line 2 delete the “of” so that the wording reads “. . . single leaf external walls of . . .”.

(9) *Replacement pages –*

Delete existing Pages 1, 4, 5 and 55 and substitute new Pages 1, 4, 5 and 55 given in the Replacement Pages Section.

AMD 1

Technical Booklet E – Fire Safety

Amendments to Technical Booklet E –

(1) *Page 10. paragraph 1.11 –*

Delete sub-paragraph (b)(i) and substitute –

"(i) exceed 50 m^2 in floor area; or".

(2) *Page 10. paragraph 1.13 –*

At the end of the paragraph add –

"(see Tables 1.8, 3.1 and 3.2)".

(3) *Page 10. paragraph 1.14 –*

In line 5 after "room" insert "or a kitchen".

(4) *Page 10. paragraph 1.14 –*

In line 7 after "room" insert "or kitchen".

(5) *Page 18. Title above paragraph 1.34 –*

Delete "**spacial**" and substitute "**spatial**".

(6) *Page 25. paragraph 1.50 –*

In the second paragraph delete the comma between "storey" and "exit".

(7) *Page 29. Table 1.8 –*

In category A1 line 4 delete "Diagram 1.1" and substitute "Diagram 1.2".

(8) *Page 58. paragraph 3.35 –*

In line 5 delete "one of the methods" and substitute "an appropriate method".

(9) *Page 86. paragraph 6.2 –*

In line 1 of sub-paragraph (c)(iii) delete "other".

Technical Booklet G – Sound

Amendments to Technical Booklet G –

(1) *Page 1. Under the heading* ***General*** *–*

In the first paragraph delete “1990” and substitute “1994”.

(2) *Page 1. Under the heading* ***British Standards and European Technical Specifications*** *–*

Delete the existing paragraph and substitute –

“In this introduction and throughout this Technical Booklet any reference to a British Standard shall be construed as a reference to –

(a) a British Standard or British Standard Code of Practice;

(b) a harmonised standard or other relevant standard of a national standards body of any Member State of the European Economic Area;

(c) an international standard recognised for use in any Member State of the European Economic Area;

(d) any appropriate, traditional procedure of manufacture of a Member State of the European Economic Area which has a technical description sufficiently detailed to permit an assessment of the goods or materials for the use specified; or

(e) a European Technical Approval issued in accordance with the Construction Products Directive,

provided that the proposed standard, code of practice, specification, technical description or European Technical Approval provides, in use, equivalent levels of safety, suitability and fitness for purpose as that provided by the British Standard.”.

(3) *Page 1. Between the amended paragraph* ***British Standards and European Technical Specifications*** *and the existing paragraph* ***Materials and workmanship*** *–*

Insert the following new paragraphs –

“**Products conforming with a European Council Directive**

Any product designed and manufactured to comply with the requirements of a European Council Directive does not have to comply with any other standard or part of a standard, whether British, International or other, which relates to the same characteristic or specific purpose as the EC Directive.

CE marked construction products

Any construction product (within the meaning of the Construction Products Directive) which bears a CE Mark shall be treated as if it satisfied the requirements of any appropriate British Board of Agrément Certificate, British Standard or British Standard Code of Practice relating to such a product, where the CE Mark relates to the same characteristic or specific purpose as the Certificate, Standard or Code of Practice.

Testing of materials and construction

Where for the purposes of this Technical Booklet testing is carried out it shall be carried out by an appropriate organisation offering suitable and satisfactory evidence of technical and professional competence and independence. This condition shall be satisfied where the testing organisation is accredited in a Member State of the European Economic Area in accordance with the relevant parts of the EN 45000 series of standards for the tests carried out.”.

Technical Booklet H – Stairs, ramps and guarding

Amendments to Technical Booklet H –

(1) *Page 6. paragraph 2.11 –*

Delete line 4 and substitute –

"However, notwithstanding the provisions of paragraph 2.15, a single step may be provided –".

(2) *Page 6. paragraph 2.15 –*

Delete the existing paragraph and substitute –

"A landing need not be provided between an external flight and a doorway if the rise of the flight is not more than 600 mm and the door slides or opens away from the steps.".

(3) *Page 8. paragraph 3.7 –*

In line 2 delete "continous" and substitute "continuous"

(4) *Page 9. Table 4.1 –*

Delete existing Table and substitute new Table 4.1.

(5) *Page 10. paragraphs 4.4 and 4.5; and Diagrams 4.2 and 4.3 –*

Delete these paragraphs and Diagrams.

Table **4.1 Minimum height and strength of guarding**

	Location of guarding (1)	Min height+ (mm) (2)	Min horizontal force/ metre run (kN/m) (3)
1	**Dwellings**		
(a)	guarding a flight, ramp, landing or floor within a dwelling	900*	0.36
(b)	guarding an external flight or ramp	900	0.74
(c)	guarding not described in (a) or (b)	1100	0.74
2	**Retail buildings**		
(a)	guarding a flight or ramp	900	1.50
(b)	guarding not described in (a)	1100*	1.50
3	**Other buildings**		
(a)	guarding a flight or ramp where crowd loading will not occur	900	0.74
(b)	guarding a flight or ramp where crowd loading† will occur	900	3.00
(c)	guarding not described in (b) where crowd loading† will occur	1100*	3.00
(d)	guarding a floor immediately in front of fixed seating	800	1.50
(e)	guarding not described in (a) to (d)	1100*	0.74

+ In the case of a flight or ramp the height shall be measured from the pitch line or slope

* This may be reduced to 800mm at openable windows or glazing at changes of level. The glazing may be designed to act as guarding, in which case separate guarding would not be required

† Crowd loading will occur in parts of buildings where people assemble in large numbers such as in theatres, discotheques, cinemas, sports halls, assembly halls, shopping malls and similar areas

Technical Booklet L – Heat producing appliances

Amendments to Technical Booklet L –

(1) *Page 1. Under the heading* ***General*** –

In the first paragraph delete “1990” and substitute “1994”.

(2) *Page 1. Under the heading* ***British Standards and European Technical Specifications*** –

Delete the existing paragraph and substitute –

“In this introduction and throughout this Technical Booklet any reference to a British Standard shall be construed as a reference to –

(a) a British Standard or British Standard Code of Practice;

(b) a harmonised standard or other relevant standard of a national standards body of any Member State of the European Economic Area;

(c) an international standard recognised for use in any Member State of the European Economic Area;

(d) any appropriate, traditional procedure of manufacture of a Member State of the European Economic Area which has a technical description sufficiently detailed to permit an assessment of the goods or materials for the use specified; or

(e) a European Technical Approval issued in accordance with the Construction Products Directive,

provided that the proposed standard, code of practice, specification, technical description or European Technical Approval provides, in use, equivalent levels of safety, suitability and fitness for purpose as that provided by the British Standard.”.

(3) *Page 1. Between the amended paragraph* **British Standards and European Technical Specifications** *and the existing paragraph* **Materials and workmanship** –

Insert the following new paragraphs –

“**Products conforming with a European Council Directive**

Any product designed and manufactured to comply with the requirements of a European Council Directive does not have to comply with any other standard or part of a standard, whether British, International or other, which relates to the same characteristic or specific purpose as the EC Directive.

CE marked construction products

Any construction product (within the meaning of the Construction Products Directive) which bears a CE Mark shall be treated as if it satisfied the requirements of any appropriate British Board of Agrément Certificate, British Standard or British Standard Code of Practice relating to such a product, where the CE Mark relates to the same characteristic or specific purpose as the Certificate, Standard or Code of Practice.

Testing of materials and construction

Where for the purposes of this Technical Booklet testing is carried out it shall be carried out by an appropriate organisation offering suitable and satisfactory evidence of technical and professional competence and independence. This condition shall be satisfied where the testing organisation is accredited in a Member State of the European Economic Area in accordance with the relevant parts of the EN 45000 series of standards for the tests carried out.”.

Amendments to Technical Booklet L (continued) –

(4) *Page 2. paragraph 1.2 –*

Delete the definition "Fire compartment" and substitute –

"**Fire compartment** means a building or part of a building, comprising one or more rooms, spaces or storeys, constructed to prevent the spread of fire to or from another part of the same building or an adjoining building. A roof space above the top storey of a compartment shall be included in that compartment.".

(5) *Page 2. paragraph 1.3 –*

Delete lines 7 and 8 and substitute –

"Ventilation openings shall not be located in internal fire compartment walls.".

(6) *Page 7 –*

After paragraph 2.20 insert –

"**2.20A** Combustible material shall not be placed closer to the inner surfaces of the back or jambs of the fireplace recess than –

(a) 150 mm in the case of fixing plugs; and

(b) 200 mm in the case of any other component.".

(7) *Page 7. Diagram 5 –*

Delete existing Diagram and substitute new Diagram 5.

(8) *Page 8. Diagram 6 –*

Delete existing Diagram and substitute new Diagram 6.

Diagram **5** **Fireplace recesses**

see para 2.20

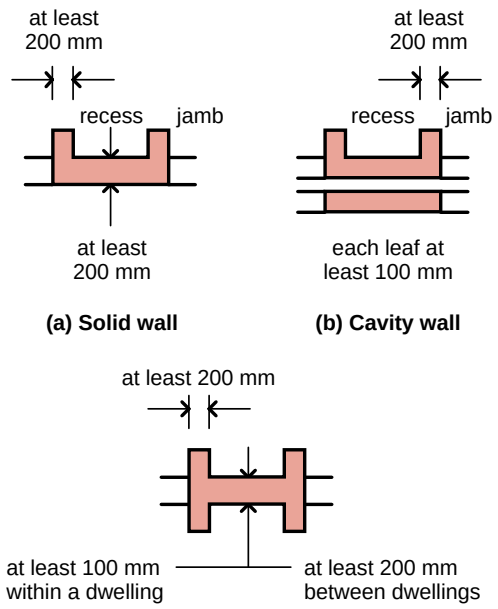

AMD 1

Diagram **6** **Wall adjacent to hearth**

see para 2.21

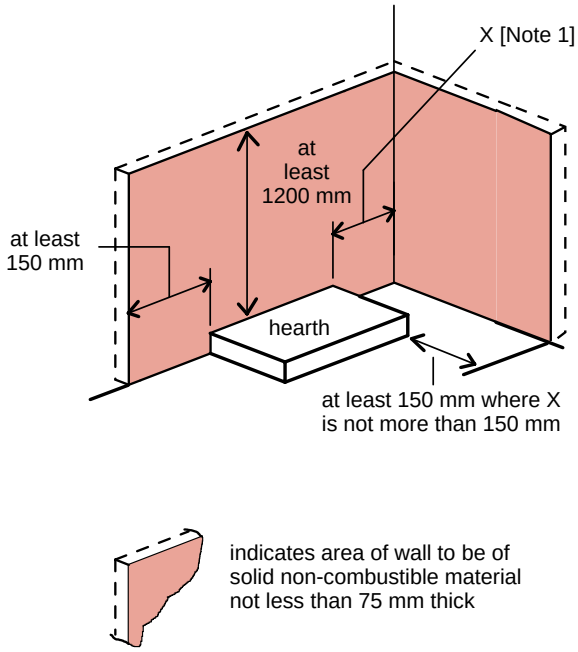

Note
1. There is no requirement for protection of the return wall where X is more than 150 mm

AMD 1

Technical Booklet N – Drainage

Amendments to Technical Booklet N –

(1) *Page 1. Under the heading* ***General*** *–*

In the first paragraph delete “1990” and substitute “1994”.

(2) *Page 1. Under the heading* ***British Standards and European Technical Specifications*** *–*

Delete the existing paragraph and substitute –

“In this introduction and throughout this Technical Booklet any reference to a British Standard shall be construed as a reference to –

(a) a British Standard or British Standard Code of Practice;

(b) a harmonised standard or other relevant standard of a national standards body of any Member State of the European Economic Area;

(c) an international standard recognised for use in any Member State of the European Economic Area;

(d) any appropriate, traditional procedure of manufacture of a Member State of the European Economic Area which has a technical description sufficiently detailed to permit an assessment of the goods or materials for the use specified; or

(e) a European Technical Approval issued in accordance with the Construction Products Directive,

provided that the proposed standard, code of practice, specification, technical description or European Technical Approval provides, in use, equivalent levels of safety, suitability and fitness for purpose as that provided by the British Standard.”.

(3) *Page 1. Between the amended paragraph* ***British Standards and European Technical Specifications*** *and the existing paragraph* ***Materials and workmanship*** *–*

Insert the following new paragraphs –

“**Products conforming with a European Council Directive**

Any product designed and manufactured to comply with the requirements of a European Council Directive does not have to comply with any other standard or part of a standard, whether British, International or other, which relates to the same characteristic or specific purpose as the EC Directive.

CE marked construction products

Any construction product (within the meaning of the Construction Products Directive) which bears a CE Mark shall be treated as if it satisfied the requirements of any appropriate British Board of Agrément Certificate, British Standard or British Standard Code of Practice relating to such a product, where the CE Mark relates to the same characteristic or specific purpose as the Certificate, Standard or Code of Practice.

Testing of materials and construction

Where for the purposes of this Technical Booklet testing is carried out it shall be carried out by an appropriate organisation offering suitable and satisfactory evidence of technical and professional competence and independence. This condition shall be satisfied where the testing organisation is accredited in a Member State of the European Economic Area in accordance with the relevant parts of the EN 45000 series of standards for the tests carried out.”.

Technical Booklet R – Access and facilities for disabled people

Amendments to Technical Booklet R –

(1) *Page 3. paragraph 0.2 –*

Delete the second sentence and substitute –

"Where access to an extension is achieved only through the existing building then Part R applies to the extension of a storey if Part R applied to the existing storey when it was erected. Part R also applies to a ground storey extension if –

(a) there is fortuitous access for disabled people to and within the existing ground storey;

(b) the extension has a separate entrance; or

(c) it is both greater than 200 m^2 and more than 10% of the existing ground storey area.".

(2) *Page 11. Diagram 2.7 –*

Delete existing Diagram and substitute new Diagram 2.7.

Diagram **2.7 Entrance doorways**

see para 2.9

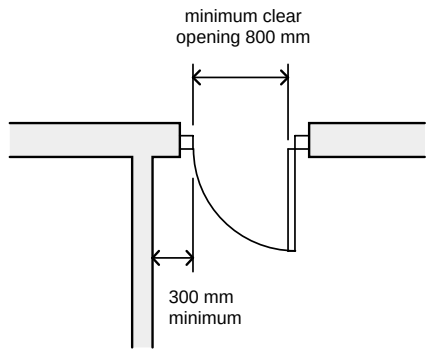

(a) minimum clear opening
single doors and at least one of a pair of doors shall provide the minimum clear opening

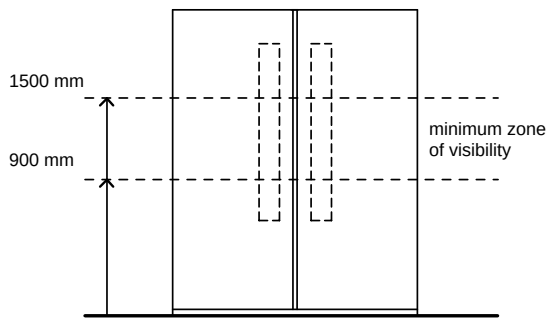

(b) glazed panels

AMD 1

Amendments to Technical Booklet R (continued) –

(3) *Page 12. Diagram 3.1 –*

Delete existing Diagram and substitute new Diagram 3.1.

(4) *Page 13. paragraph 3.7 –*

In sub-paragraph (b) insert a comma after "200m^2".

(5) *Page 15. paragraph 3.9 –*

At the end of sub-paragraph **(f)**(i) insert "and".

(6) *Page 16. Diagram 4.1 –*

Delete existing Diagram and substitute new Diagram 4.1.

Diagram **3.1** **Internal doorways**

see para 3.3

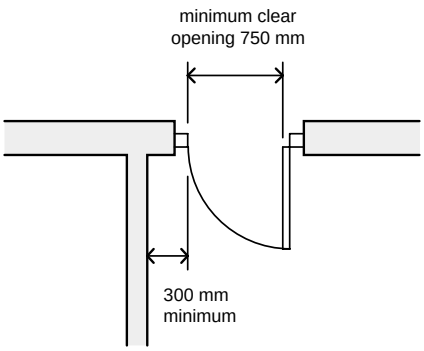

(a) minimum clear opening
single doors and at least one of a pair of doors shall provide the minimum clear opening

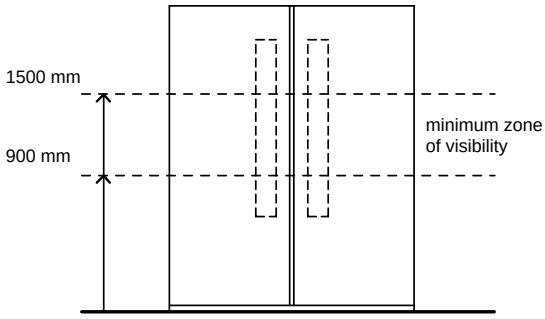

(b) glazed panels
doors across circulation routes shall have visibility glazing

AMD 1

Diagram **4.1** **A suitable hotel bedroom and en-suite bathroom**

see para 4.3

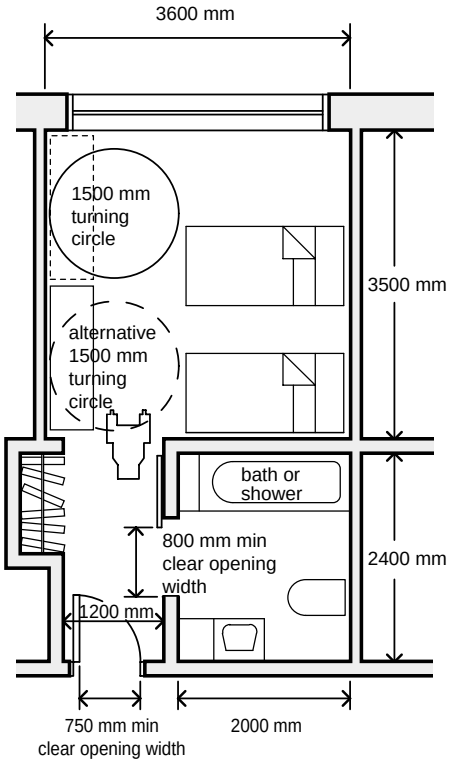

Notes
(1) Bath arrangement as in Diagram 4.2
(2) Shower arrangement as in Diagram 4.3
(3) Grab rails are not shown but should be provided as shown in Diagram 4.2 for a bath, in Diagram 4.3 for a shower and in Diagram 5.1 for a WC
(4) Sufficient space shall be provided between the WC and bath, to permit lateral transfer from a wheelchair, and between the WC and basin, to permit frontal transfer

AMD 1

Replacement pages

The pages in this Section are replacement pages for pages in the existing Technical Booklet. The pages are printed on only one side so that they can be inserted into the existing Technical Booklet.

Amendments to Technical Booklet D –

Delete existing pages 1, 4, 5 and 55 and substitute new pages 1, 4, 5 and 55 given in this Section.

Introduction

This Technical Booklet has been prepared by the Department of the Environment for Northern Ireland and provides for certain methods and standards of building which, if followed, will satisfy the requirements of the Building Regulations (Northern Ireland) 1994 ("the Building Regulations").

There is no obligation to follow the methods or comply with the standards set out in this Technical Booklet.

If you prefer you may adopt another way of meeting the requirements of the Building Regulations but you will have to demonstrate that you have satisfied those requirements by other means.

Other regulations

This Technical Booklet relates only to the requirements of regulations D1 and D3. The work will also have to comply with all other relevant Building Regulations.

British Standards and European Technical Specifications

In this introduction and throughout this Technical Booklet any reference to a British Standard shall be construed as a reference to –

(a) the British Standard or British Standard Code of Practice listed in the Appendix;

(b) a harmonised standard or other relevant standard of a national standards body of any Member State of the European Economic Area;

(c) an international standard recognised for use in any Member State of the European Economic Area;

(d) any appropriate, traditional procedure of manufacture of a Member State of the European Economic Area which has a technical description sufficiently detailed to permit an assessment of the goods or materials for the use specified; or

(e) a European Technical Approval issued in accordance with the Construction Products Directive,

provided that the proposed standard, code of practice, specification, technical description or European Technical Approval provides, in use, equivalent levels of safety, suitability and fitness for purpose as that provided by the British Standard.

Products conforming with a European Council Directive

Any product designed and manufactured to comply with the requirements of a European Council Directive does not have to comply with any other standard or part of a standard, whether British, International or other, which relates to the same characteristic or specific purpose as the EC Directive.

CE marked construction products

Any construction product (within the meaning of the Construction Products Directive) which bears a CE Mark shall be treated as if it satisfied the requirements of any appropriate British Board of Agrément Certificate, British Standard or British Standard Code of Practice relating to such a product, where the CE Mark relates to the same characteristic or specific purpose as the Certificate, Standard or Code of Practice.

Testing of materials and construction

Where for the purposes of this Technical Booklet testing is carried out it shall be carried out by an appropriate organisation offering suitable and satisfactory evidence of technical and professional competence and independence. This condition shall be satisfied where the testing organisation is accredited in a Member State of the European Economic Area in accordance with the relevant parts of the EN 45000 series of standards for the tests carried out.

Section 2 – Sizes of certain timber floor, ceiling and roof members in single family houses

Application

2.1 This Section applies only to single family houses of not more than 3 storeys.

Use of this Section

2.2 The stability requirements in paragraph 1.3 shall be complied with when using this Section.

2.3 The dimensions of a timber member may be determined by this Section if –

(a) the dead and imposed loads to be sustained by the floor, ceiling or roof of which the member forms part do not exceed the values given in the notes to the appropriate diagrams and tables;

(b) the species and grade of timber for the strength class to which the table relates is either –

(i) as given in Table 2.1 for more common species; or

(ii) as given in the more comprehensive tables of BS 5268: Part 2: 1996;

(c) the timber is service class 1 or 2 and is clearly marked “Dry” or “KD” (kiln dried); and

(d) floorboarding complying with BS 1297: 1987 is used.

2.4 Strength classes, species, grades and species combinations referred to in this Section are as defined in BS 5268: Part 2: 1996.

2.5 Cross sectional dimensions given in the tables to this Section are applicable to either basic sawn or regularised sizes as defined in BS EN 1313-1: 1997. Reference shall be made to the accompanying notes to the tables to determine whether sawn or regularised sizes apply. The tables do not apply where dimensions have been reduced by planing. For timber of North American origin the tables apply only as indicated to surface sizes unless the timber has been resawn to BS EN 1313-1: 1997 requirements.

2.6 Notches and holes in simply supported floor and roof joists shall be within the following limits –

(a) notches shall be no deeper than 0.125 times the depth of a joist; and shall not be cut closer to the support than 0.07 of the span, nor further away than 0.25 times the span; and

(b) holes shall be no greater diameter than 0.25 times the depth of the joist; shall be drilled at the neutral axis; shall be not less than 3 diameters (centre to centre) apart; and shall be located between 0.25 and 0.4 times the span from the supports.

No notches or holes shall be cut in roof rafters, other than at supports where the rafter may be birdsmouthed to a depth not exceeding 0.33 times the rafter depth.

2.7 Bearing areas and workmanship shall comply with the relevant requirements of BS 5268: Part 2: 1996. Refer also to paragraphs 3.33 to 3.37.

Spans, sizes and spacings for timber members of strength classes C16 and C24

2.8 Table 2.2 and Diagram 2.1 refer to further tables and diagrams with accompanying notes that give spans, sizes and spacings for certain timber floor, ceiling and roof members.

In Tables 2.4 to 2.27 all spans, except those for floorboards, are measured as the clear dimension between supports, and all spacings are the dimensions between longitudinal centres of members. All references in these tables to SC3 shall be replaced by C16 and all references to SC4 shall be replaced by C24.

2.9 Tables 2.8 to 2.23 give the sizes of certain roof members for imposed loads of 0.75 kN/m^2 and 1.00kN/m^2. The loading applicable at a particular site depends on the elevation of that site above sea level, as follows –

(a) up to 180m above sea level – 0.75kN/m^2; and

(b) 180m to 300m above sea level – 1.00kN/m^2.

Sites at higher elevations are beyond the scope of this Technical Booklet.

Table 2.1 Common species/grade combinations which satisfy the requirements for the strength classes to which Tables 2.4-2.27 relate

Species	Origin	Grading Rules	Grades to satisfy strength class C16	Grades to satisfy strength class C24
Redwood or Whitewood	imported	BS 4978	GS	SS
Douglas Fir	UK	BS 4978	SS	—
Larch	UK	BS 4978	GS	SS
British Pine	UK	BS 4978	SS	—
British Spruce	UK	BS 4978	SS	—
Douglas Fir – Larch Hem – Fir Spruce – Pine – Fir	CANADA	BS 4978	GS	SS
Douglas Fir – Larch Hem – Fir Spruce – Pine – Fir	CANADA	NLGA	Joist and Plank No. 1 & 2 Struct. L. F. No. 1 & 2	Joist and Plank Select Struct. L. F. Select
Douglas Fir – Larch Hem – Fir Spruce – Pine – Fir	CANADA	MSR	Machine Stress-Rated 1450f-1.3E	Machine Stress-Rated 1800f-1.6E
Douglas Fir – Larch	USA	BS 4978	GS	SS
Hem – Fir	USA	BS 4978	GS	SS
Western Whitewoods	USA	BS 4978	SS	—
Southern Pine	USA	BS 4978	GS	SS
Douglas Fir – Pine	USA	NGRDL	Joist and Plank No. 1 & 2 Struct. L. F. No. 1 & 2	Joist and Plank Select Struct. L. F. Select
Hem – Fir	USA	NGRDL	Joist and Plank No. 1 & 2 Struct. L. F. No. 1 & 2	Joist and Plank Select Struct. L. F. Select
Western Whitewoods	USA	NGRDL	Joist and Plank Select Struct. L. F. Select	—
Southern Pine	USA	NGRDL	Joist and Plank No. 3 Stud grade	Joist and Plank Select
Douglas Fir – Larch Hem – Fir Southern Pine	USA	MSR	Machine Stress – Rated 1450f – 1.3E	Machine Stress – Rated 1800f – 1.6E

Notes

1. The common species/grade combinations given in this table are for particular use with the other tables in this Section and for the cross section sizes given in those tables. Definitive and more comprehensive tables for assigning species/grade combinations to strength classes are given in BS 5268 : Part 2 : 1996.
2. The grading rules for American and Canadian Lumber are those approved by the American Lumber Standards Board of Review and the Canadian Lumber Standards Accreditation Board respectively (see BS 5268 : Part 2 : 1996).
3. In Tables 2.4 to 2.27 of this Section all references to SC3 shall be replaced by C16, and all references to SC4 shall be replaced by C24.

Appendix – Publications referred to

BS 12 : 1996 Specification for Portland cements.

BS 187 : 1978 Specification for calcium silicate (sandlime and flintlime) bricks.

AMD 5427 : AUG. 1987.

BS 882 : 1992 Specification for aggregates from natural sources for concrete.

BS 1243 : 1978 Specification for metal ties for cavity wall construction.

AMD 3651 : APR. 1981,

AMD 4024 : JULY 1982.

BS 1297 : 1987 Specification for tongued and grooved softwood flooring.

BS 3921 : 1985 (1995) Specification for clay bricks.

AMD 8946 : DEC. 1995.

BS 4471 : 1987.

(Superseded by BS EN 1313 - 1)

BS 4978 : 1996 Specification for visual strength grading for softwood.

AMD 9434 : APR. 1997.

BS 5268 : Structural use of timber :

Part 2 : 1996 Code of practice for permissible stress design, materials and workmanship.

AMD 9451 : MAY 1997.

Part 3 : 1998 Code of practice for trussed rafter roofs.

BS 5328 : Concrete :

Part 1 : 1997 Guide to specifying concrete.

Part 2 : 1997 Methods for specifying concrete mixes.

AMD 9696 : OCT. 1997.

BS 5390 : 1976 (1984) Code of practice for stone masonry.

AMD 4272 : JUNE 1983.

BS 5628 : Code of practice for the use of masonry:

Part 1 : 1992 Structural use of unreinforced masonry.

AMD 7745 : JULY 1993.

Part 3 : 1985 Materials and components, design and workmanship.

AMD 4974 : NOV. 1985.

BS 6073 : Precast concrete masonry units

Part 1 : 1981 Specification for precast concrete masonry units.

AMD 3944 : MAR. 1982,

AMD 4462 : FEB. 1984.

BS 6649 : 1985 Specification for clay and calcium silicate modular bricks.

BS 6750 : 1986 Specification for modular co-ordination in building.

CP 3 : Chapter V : Part 2 : 1972 Wind loads.

AMD 4952 : JAN. 1986,

AMD 5152 : MAR. 1986,

AMD 5343 : JUNE 1986,

AMD 6028 : SEPT. 1988,

AMD 7908 : SEPT. 1993.

BS EN 1313 : Round and sawn timber, permitted deviations and preferred sizes.

BS EN 1313 - 1 : 1997 Softwood sawn timber.

Printed in the UK for The Stationery Office Ltd
Dd. 601179 2/99 C9 14567